BYJU'S EXAM PREP

ESE Mains 2023

Electronics & Telecom. Engineering

Questions & Solutions

PAPER-2

Electronics and Telecommunication Engineering Paper 2 : Marks Distribution					
S. No.	Subjects	Difficulty Level 2023	2023 Marks	2022 Marks	2021 Marks
1	Analog and Digital Communication Systems	Easy	70	100	120
2	Control Systems	Easy	60	80	70
3	Computer Organization and Architecture	Moderate	90	80	110
4	Electro Magnetics	Moderate	90	80	80
5	Advanced Electronics	Moderate	80	80	60
6	Advanced Communication	Moderate	90	60	40
Total			480	480	480

ELECTRONICS & TELECOMMUNICATION ENGINEERING

Paper-2

SECTION-'A'

1.(a) A band limited random signal X(t) has two-sided power spectral density $S_X(f)$ (PSD) given by

$$S_X(f) = \begin{cases} 10^{-6}\left(3000 - |f|\right) \text{ watts/Hz for } |f| \le 3 \text{ kHz} \\ 0, \qquad \text{otherwise} \end{cases}$$

where f is frequency expressed in Hz.

This signal modulates a carrier $\cos 16000\pi t$ and resultant signal is passed through an ideal band pass filter of unit gain with central frequency of 8 kHz and bandwidth of 2 kHz. Draw two-sided power spectral density diagram for the given signal, modulated carrier and the output of filter.

[10 Marks]

Sol. $S_X(f) = \begin{cases} 10^{-6}(3000 - |f|) \text{Watts/Hz} & ; \quad \text{for } |f| \le 3 \text{ kHz} \\ 0, & ; \quad \text{otherwise} \end{cases}$

$$S_X(f) = 3 \times 10^{-3}\left[1 - \frac{|f|}{3000}\right]$$

$$S_X(f) = A\left[1 - \frac{|t|}{\tau}\right]$$

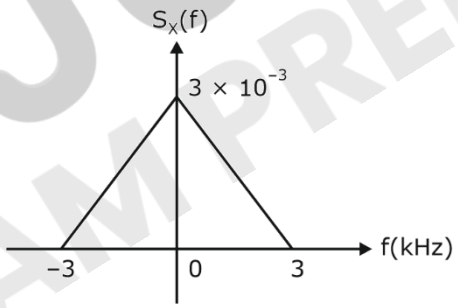

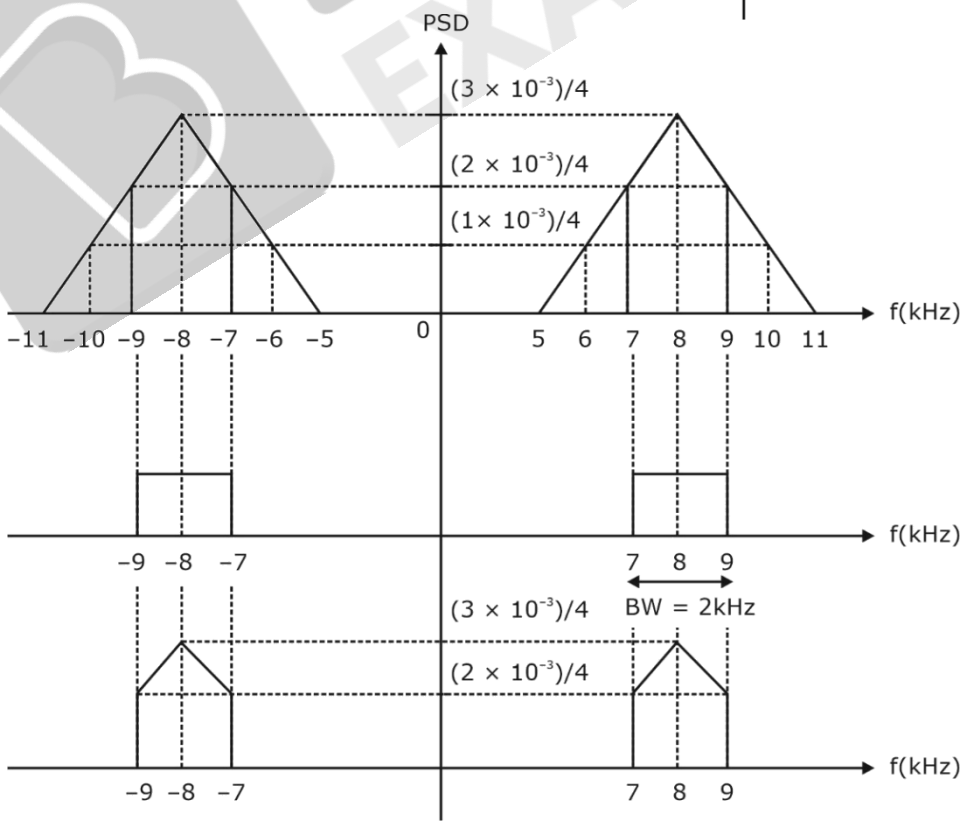

Power of y(t) = Area under output PSD

$$\text{Power of } y(t) = 2\left[\frac{2\times10^{3}\times2\times10^{-3}}{4}+\frac{1}{2}\times2\times10^{3}\times\frac{1}{4}\times10^{-3}\right]$$

$$\text{Power of } y(t) = 2\left[1+\frac{1}{4}\right]=\frac{10}{4}=2.5$$

1.(b) Convert the given block diagram to equivalent signal flow graph. Find the transfer function using Mason's Gain Formula.

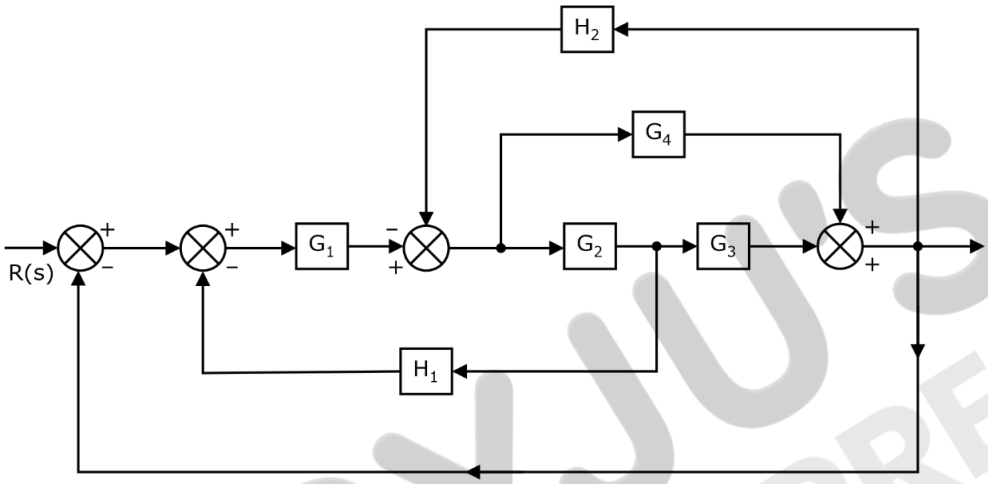

[10 Marks]

Sol. The equivalent signal flow graph is as follows,

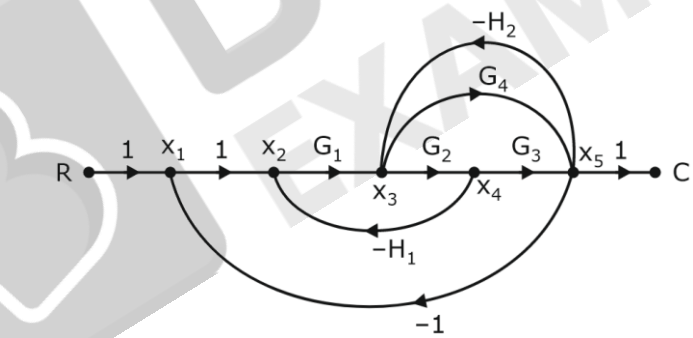

The forward paths are:

$P_1 \Rightarrow R - x_1 - x_2 - x_3 - x_4 - x_5 - C$

$P_1 = G_1\, G_2\, G_3$

$P_2 \Rightarrow R - x_1 - x_2 - x_3 - x_5 - C$

$P_2 = G_1\, G_4$

The closed loops are:

L_1: $x_2 - x_3 - x_4 - x_2$

$L_1 = G_1G_2(-H_1) = -G_1G_2H_1$

L_2: $x_1 - x_2 - x_3 - x_4 - x_5 - x_1$

$L_2 = 1 \times G_1 \times G_2 \times G_3 \times (-1) = -G_1\, G_2\, G_3$

L_3: $x_1 - x_2 - x_3 - x_5 - x_1$

$L_3 = 1 \times G_1 \times G_4 \times (-1) = -G_1G_4$

L_4: x_3 - x_4 - x_5 - x_3

$L_4 = G_2G_3(-H_2) = -G_2G_3H_2$

L_5: x_3 - x_5 - x_3

$L_5 = G_4(-H_2) = -G_4H_2$

All loops are touching each other. Also, if any of the forward paths is erased, all loops are open.

So, path factors are: $\Delta_1 = 1$, $\Delta_2 = 1$

Graph determinant:

$\Delta = 1 - (L_1 + L_2 + L_3 + L_4 + L_5) = 1 + G_1G_2H_1 + G_1G_2G_3 + G_1G_4 + G_2G_3H_2 + G_4H_2$

By Mason's gain formula,

$$\frac{C}{R} = \frac{\Sigma P_k \Delta_k}{\Delta} = \frac{P_1\Delta_1 + P_2\Delta_2}{\Delta}$$

$$\frac{C}{R} = \frac{G_1G_2G_3 \times 1 + G_1G_4 \times 1}{\Delta}$$

$$\frac{C}{R} = \frac{G_1(G_2G_3 + G_4)}{1 + G_1G_2H_1 + G_1G_2G_3 + G_1G_4 + G_2G_3H_2 + G_4H_2}$$

1.(c) What do cores mean in a processor? Differentiate between Multi-core and Many -core architectures.

[4 + 6 Marks]

Sol. Core means, the pathways made up of billions of microscopic transistors within a processor that help to make it work.

- Multi-core typically refers to devices with 2-8 or so cores in them.
- Many cores typically refer to devices with dozens or hundreds of cores.
- Many core processors provide a higher degree of explicit parallelism when compared to multi-core processors.
- Many core processors are special kinds of multi-core processors designed for a higher throughput.
- Cache coherency is an issue limiting the scaling of multi-care processors.
- Many core processors bypass the issue of cache coherency by using methods such as message passing, DMA, scratchpad memory etc.
- Multi-core processor implements the multi-processing in a single physical package. Here cores may or may not share caches.

1.(d) The electric field intensity of a linearly polarized uniform plane wave propagating in the +z direction in sea water is

$\vec{E} = \hat{a}_x\ 100\cos\left(10^7 \pi t\right)$ V/m at $z = 0$.

The constitutive parameters of sea water are

$\varepsilon_r = 72$, $\mu_r = 1$, and $\sigma = 4\,(\text{S/m})$.

Determine the intrinsic impedance, wavelength and skin depth. The value of ε_0 may be taken as 8.854×10^{-12} F/m, and $\mu_0 = 4\pi \times 10^{-7}$ H/m.

[10 Marks]

Sol. Given, $\vec{E}(0, t) = 100 \cos(10^7 \pi t)\, \hat{a}_x$ V/m

In general,

$\vec{E}(z, t) = 100 e^{-\alpha z} \cos(10^7 \pi t - \beta z) \hat{\alpha}_x$ V/m

The loss tangent of the medium is:

$$\tan\theta = \frac{\sigma}{\omega\varepsilon} = \frac{4}{(10^7\pi)\left(72 \times \frac{1}{36\pi} \times 10^{-9}\right)}$$

$\tan\theta = 2 \times 10^2 = 200 \rightarrow$ high

& $\theta = 89.71° \approx 90°$

So, medium can be considered as a good conductor.

Intrinsic impedance will be,

$$\eta = \sqrt{\frac{\omega\mu_0}{\sigma}} e^{j\pi/4}$$

$$\eta = \sqrt{\frac{10^7\pi \times 4\pi \times 10^{-7}}{4}} e^{j\pi/4} = \pi e^{j\pi/4} \Omega$$

For a good conductor,

$$\alpha = \beta = \sqrt{\pi f \mu \sigma} = \sqrt{\frac{\omega\mu\sigma}{2}} = \sqrt{\frac{(10^7\pi)(4\pi \times 10^{-7}) \times 4}{2}}$$

$$\alpha = \beta = 2\sqrt{2}\pi$$

So, wavelength is,

$$\lambda = \frac{2\pi}{\beta} = \frac{2\pi}{2\sqrt{2}\pi} = \frac{1}{\sqrt{2}}$$

$\lambda = 0.707$ m

Skin depth is, $\delta = \frac{1}{\alpha} = \frac{1}{2\sqrt{2}\pi} = 0.113$ m

1.(e) An electron beam exposure system operates at 20 kV accelerating voltage. Column length is 70 cm. Spot current is 500 nA, and numerical aperture of the final lens is 10^{-2} rad. The energy spread at the cathode is 0.2 V. If the coefficients of spherical and chromatic aberration are 10 cm and 62.5 cm respectively, determine the resolution limit at the centre of the exposure field.

[10 Marks]

Sol. $V_0 = 20$ kV $= 20 \times 10^3$ Volts

Mass of electron, $m = 9.1 \times 10^{-31}$ kg

Charge of electron, $q = 1.6 \times 10^{-19}$ Coulomb

Plank's constant, $h = 6.67 \times 10^{-34}$ J- sec

Wavelength,

$$\lambda = \frac{h}{\sqrt{2\,mqV_0}} = \frac{6.67\times10^{-34}}{\sqrt{2\times9.1\times10^{-31}\times1.6\times10^{-19}\times20\times10^{3}}}$$

$$\lambda = 8.68\times10^{-12}\ \text{m}$$

Resolution limit,

$$d = \frac{0.612\lambda}{n\sin\alpha} = \frac{0.612\lambda}{NA}$$

Where, NA = Numerical aperture

$$d = \frac{0.612\times8.68\times10^{-12}}{10^{-2}} = 5.31\times10^{-10}\ \text{m}$$

1.(f) Between direct modulation and external modulation, which approach would you prefer as a dispersion management solution in case of optical fiber communication and why?

[10 Marks]

Sol. The figure given below shows the basic concept of direct modulation of laser diode being used as an optical source.

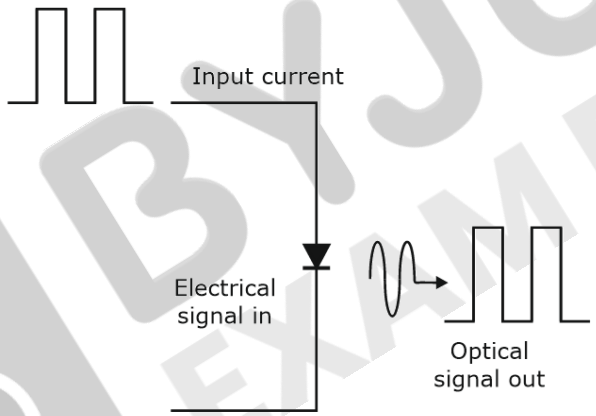

Basic concept of direct modulation

In direct modulation, the laser diode's bias current is modulated with signal input to produce modulated optical output. This approach is straightforward and low cost but is susceptible to chirp (spectral broadening) thus exposing the signal to higher dispersion.

The given figure below shows the basic concept of external modulation of laser diode being used as an optical source.

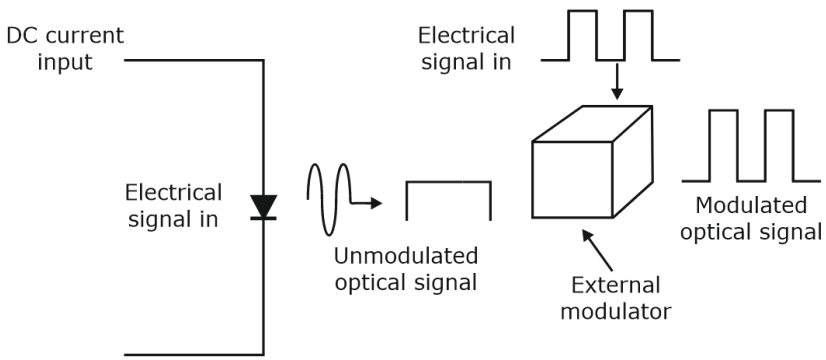

Basic concept of external modulation

In external modulation, the laser diode's bias current is stable. This approach yields low chirp and better dispersion performance but is a more expensive solution for dispersion management.

2.(a) A band limited analog signal of 5 kHz is sampled at twice the Nyquist rate. Each sample is quantized into 1024 equally likely levels that are statistically independent.

(i) Calculate information rate.

(ii) Can output of the source be transmitted without error over a Gaussian channel with a bandwidth of 50 kHz and signal to noise ratio of 30 dB?

(iii) What minimum bandwidth is needed to transmit the generated signal without error if a signal to noise ratio of 10 dB is needed to be maintained?

[20 Marks]

Sol. $f_m = 5$ kHz,

$f_s = 2 \times$ Nyquist rate

$f_s = 2 \times (2f_m) = 4 f_m = 20$ kHz

$L = 1024$

$H = \log_2 L = \log_2 1024 = 10$ bits/sample

$r = 20 \times 10^3$ samples/sec

(i) Information rate R of the source is,

$R = rH = 20 \times 10^3 \times 10 = 200$ kbps

(ii) For errorfree transmission, $C \geq R$

$$C = B\log_2\left(1+\frac{S}{N}\right)$$

$C = 50 \times 10^3 \log_2(1 + 10^3)$

$C = 498.36$ kbps

Since, $C > R$, errorfree transmission is possible.

(iii) For errorfree transmission,

$C \geq R$

$$B\log_2\left(1+\frac{S}{N}\right) \geq R$$

$$B \geq \frac{R}{\log_2\left(1+\frac{S}{N}\right)} = \frac{200\times10^3}{\log_2(1+10^1)}$$

$B \geq 57.81$ kHz

The minimum bandwidth (B) = 57.8 kHz

2.(b) Consider the block diagram of an LTI system shown below:

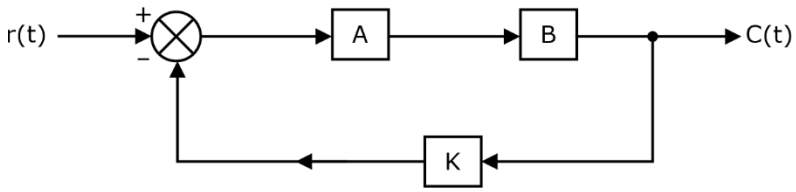

Block A has impulse response $h_A(t) = e^{-2t}\,u(t)$.

Block B has impulse response $h_B(t) = e^{-t}\,u(t)$.

Block K is an ideal amplifier of gain 'K'.

(i) Calculate transfer function of the system when K = 1.

(ii) Find impulse response of the system when K = 0.

(iii) Find the value of K for which the system becomes unstable.

[20 Marks]

Sol. The block gain in terms of s-domain is,

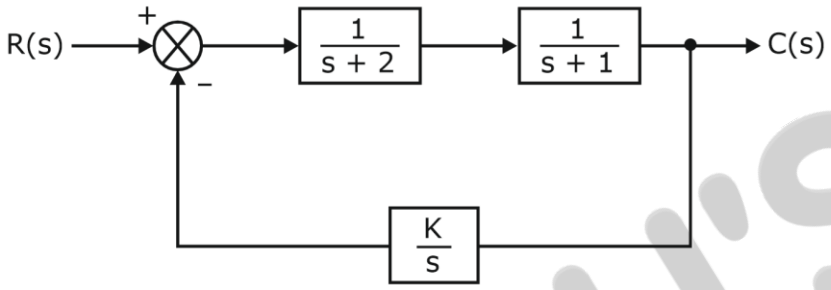

The transfer for function is,

$$\frac{C(s)}{R(s)} = \frac{\dfrac{1}{(s+1)(s+2)}}{1 + \dfrac{1}{(s+1)(s+2)} \times \dfrac{K}{s}}$$

$$\frac{C(s)}{R(s)} = \frac{s}{s^3 + 3s^2 + 2s + K}$$

(i) K = 1

The transfer function is,

$$T(s) = \frac{C(s)}{R(s)} = \frac{G(s)}{1 + G(s)H(s)} = \frac{\dfrac{1}{(s+1)(s+2)}}{1 + \dfrac{1}{(s+1)(s+2)} \times \dfrac{1}{s}}$$

$$T(s) = \frac{s}{s(s+1)(s+2)+1} = \frac{s}{s^3 + 3s^2 + 2s + 1}$$

(ii) K = 0

Transfer function will be,

$$T(s) = \frac{1}{(s+1)(s+2)}$$

$$T(s) = \frac{1}{s+1} - \frac{1}{s+2}$$

So, impulse response will be inverse Laplace transform,

$\Rightarrow e^{-t}u(t) - e^{-2t}u(t)$

(iii) The characteristic equation of the system is,

$s^3 + 3s^2 + 2s + K = 0$

forming Routh array,

s^3 1 2

s^2	3	K
s^1	$\frac{6-K}{3}$	0
s^0	K	0

For system to be unstable,

$\frac{6-K}{3} < 0$

$6 - K < 0$

$K > 6$

2.(c) **(i)** Write a code or pseudocode (in any standard programming language) to swap two numbers without using third variable.

(ii) Write a code or pseudocode (in any standard programming language) to swap two numbers using pointers.

[20 Marks]

Sol. **(i)**

```
/* Code to swap two numbers without 3rd variable */
# included < stdio.h >
Void main ()
{
int a, b;
printf ("Enter a and b values:");
scanf (" %d %d, &a, &b);
printf ("a, b values before swapping are: \n");
printf ("a = %d, b = %d", a, b);
a = a + b;
b = a – b;
a = a – b;
printf ("a, b values after swapping are: \n");
printf ("a = %d, b = %d", a, b;
}
```

Sample output: Enter a and b values: 4 6

a, b values before swapping are

a = 4, b = 6

a, b values after swapping are

a = 6, b = 4

(ii)

```
void swap (int *, int *);
Void main ( )
{
 int a, b;
```

```
printf ("Enter a, b values:");
scanf ("%d %d", &a, &b);
printf ("a, b values before swapping a = %d, b = %d', a, b);
swap (&a, &b);
printf ("a, b values after swapping : a = %d, b = %d", a, b);
}
void swap (int *p, int * q)
{
int temp;
temp = *p;
*p = *q;
*q = temp;
}
```

Sample output: Enter a, b values: 5 7

a, b values before swapping a = 5, b = 7

a, b values after swapping a = 7, b = 5

3.(a) **(i)** The AM envelope observed on a CRO is shown below:

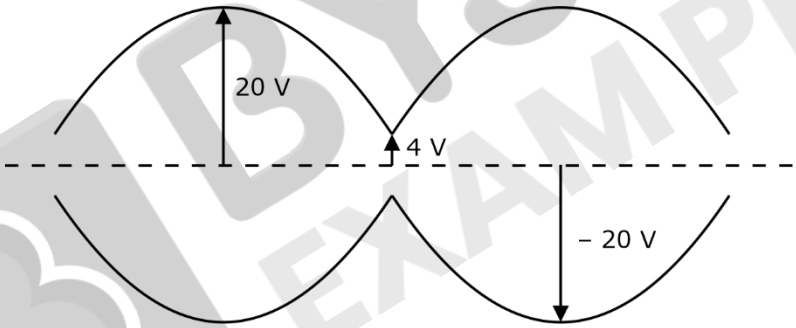

Determine the following parameters:

(I) Peak amplitude of upper and lower sideband

(II) Peak amplitude of the carrier

(III) Peak change in amplitude of modulated carrier

(IV) Modulation index and Modulation efficiency

(V) Power in sideband and total power

[10 Marks]

(ii) For a PCM system, determine:

(I) Minimum sampling rate

(II) Minimum number of bits used in PCM code

(III) Resolution

(IV) Maximum quantization error

(V) Coding efficiency

Assume:

Maximum analog input frequency = 4 kHz

Maximum decoded voltage at R_X = ± 2.55 V

Minimum dynamic rate = 46 dB

[2 × 5 = 10 Marks]

Sol. **(i)** Modulation index, $m_a = \frac{E_{max} - E_{min}}{E_{max} + E_{min}} = \frac{20-4}{20+4} = \frac{16}{24} = 0.667$

$m_a = \frac{2}{3} = 0.667$

Carrier amplitude, $A_C = \frac{E_{max} + E_{min}}{2} = \frac{20+4}{2} = 12V$

(I) Peak amplitude of upper & lower sideband $= \frac{A_C m_a}{2} = 12 \times \frac{2}{3} \times \frac{1}{2} = 4V$

(II) Peak amplitude of the carrier = 12 V

(III) Peak amplitude of carrier after modulation = $A_C(1 + m_a)$ $= 12\left(1 + \frac{2}{3}\right) = 20V$

Changing amplitude of carrier before and after modulation = 20 – 12 = 8V

(IV) Modulation index = $m_a = \frac{2}{3} = 0.667$

Percentage modulation index = 0.667 × 100 = 66.7%

Modulation efficiency $= \frac{m_a^2}{2 + m_a^2} = \frac{(0.667)^2}{2 + (0.667)^2}$ = 0.182 or 18.2%

(IV) Power in sideband, $P_{SB} = \frac{P_C m_a^2}{2} = \frac{A_C^2}{2}\frac{m_a^2}{2} = (12)^2 \times \left(\frac{2}{3}\right)^2 \times \frac{1}{4}$ = 16 W

Total power, $P_t = P_C\left(1 + \frac{m_a^2}{2}\right) = \frac{(12)^2}{2}\left[1 + \left(\frac{2}{3}\right)^2 \frac{1}{2}\right] = 87.8W$

(ii) Formulae:

Minimum sample rate:

$f_s = 2f_m$

Minimum number of bits used in the PCM code:

$2^n - 1 \geq DR$

Resolution:

$V_{min} = \frac{V_{max}}{DR} = \frac{V_{max}}{2^n - 1}$

Quantization error:

$Q_e = \frac{\text{Resolution}}{2}$

Coding efficiency:

$\eta = \frac{\text{Minimum no. of bits (including sign bit)}}{\text{Actual no. of bits (including sign bit)}} \times 100\%$

(I) Minimum sample rate = f_s

$f_s = 2f_m = 2(4\text{ kHz}) = 8\text{ kHz}$

(II) Minimum number of bits used in the PCM code = n

The number of bits used in the PCM system depends on the dynamic range (DR).

Dynamic range (DR) in terms of dB.

DR(dB) = 20 log(2^n – 1)

46 = 20log(2^n – 1)

$$\frac{46}{20} = \log(2^n - 1)$$

2.3 = log(2^n – 1)

$10^{2.3} = 2^n - 1$

199.53 = 2^n – 1

2^n = 199.53 + 1

$$n = \frac{\log 200.53}{\log 2} = 7.64$$

n ≥ 7.64 (Exchange sign bit)

Since the maximum decoded voltage at the receiver side is ± 2.55V.

Therefore, one more bit is needed to represent the + ve and – ve voltage.

Hence, a minimum of 8.64 bits must be used for the magnitude along with 1 additional sign bit representation.

Minimum number of bits = n = 7.64 (Excluding sign bit)

Minimum number of bits = n = 8.64 (Including sign bit)

Actual number of bits = 8.64 ≈ 9(Including sign bit).

(III) Resolution = V_{min}

$$V_{min} = \frac{V_{max}}{DR} = \frac{V_{max}}{2^n - 1} = \frac{2.55}{2^8 - 1} = 0.01V$$

Where n = maximum number of bits (Excluding sign bit)

Therefore, n = 7.64 ≈ 8

(IV) Quantization error = Q_e

$$Q_e = \frac{\text{Resolution}}{2} = \frac{0.01}{2} = 0.005V$$

(V) Coding efficiency = η

$$\eta = \frac{\text{Minimum no. of bits (Including sign bit)}}{\text{Actual no. of bits (Including sign bit)}} \times 100\%$$

$$\eta = \frac{8.64}{9} \times 100\% = 96\%$$

Final Summarization of the above Findings

(I) Minimum sample rate = f_s = 8 kHz

(II) Minimum number of bits used in the PCM code = n = 7.64 ≈ 8 (Excluding sign bit)

(III) Resolution = V_{min} ≈ 0.01 V

(IV) Quantization error = Q_e = 0.005V

(IV) Coding efficiency = η = 96%

3.(b) (i) A unity feedback system having forward transfer function

$$G(s) = \frac{K}{s(Ts+1)}$$

is subjected to a unit-step input. Determine the values of K and T from the output response C(t) curve shown below:

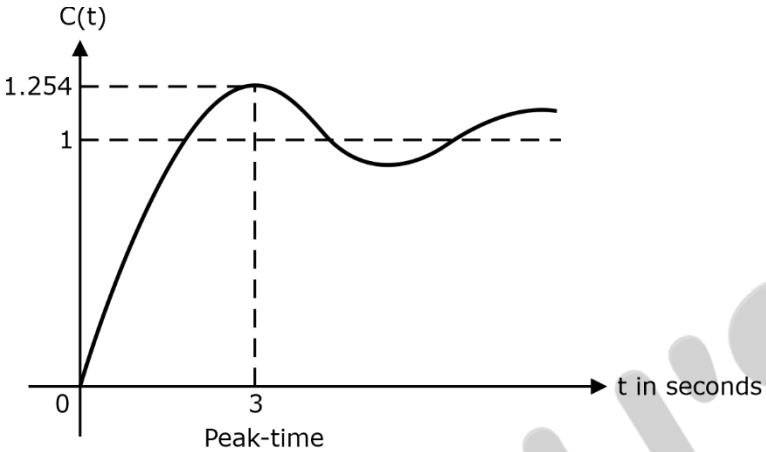

Also find the settling time of this system for 2% criterion.

[10 Marks]

(ii) Design a PD controller so that the system having open loop function $G(s)H(s) = \frac{1}{s(s+1)}$ will have a phase margin of 40° at 2 rad/sec.

[10 Marks]

Sol. (i) From the given curve,

% peak overshoots:

$$\%M_p = \frac{C(t)_{max} - C(t)_{desired}}{C(t)_{desired}} \times 100$$

$$\%M_p = \frac{1.254 - 1}{1} \times 100 = 25.4\%$$

Also, peak time, t_p = 3sec

Now, $\%M_p$ = 25.4%

Or, $M_p = 0.254 = e^{-\frac{\xi\pi}{\sqrt{1-\xi^2}}}$

Let, $\xi = \cos\phi$

So, $M_p = e^{-\pi\cot\phi} = 0.254$

$-\pi\cot\varphi = \ln(0.254) = -1.37$

$\Rightarrow \tan\phi = \frac{\pi}{1.37} = 2.29$

Or, $\Phi = 66.44°$

So, $\xi = \cos\phi \simeq 0.4$

Also, $t_p = \frac{\pi}{\omega_d} = \frac{\pi}{\omega_n\sqrt{1-\xi^2}} = 3$

$$\omega_n\sqrt{1-0.4^2} = \frac{\pi}{3}$$

$\Rightarrow \omega_n = 1.14$ rad/sec

Now, characteristic equation of system is:

$1 + G(s)\,H(s) = 0$

$$1 + \frac{K}{s(1+sT)} \times 1 = 0$$

∞, $s^2T + s + K = 0$

$$\Rightarrow s^2 + \frac{1}{T}s + \frac{K}{T} = 0$$

So, $\frac{K}{T} = \omega_n^2 = (1.14)^2 \approx 1.3$

$\Rightarrow K = 1.3T$

$$2\xi\omega_n = \frac{1}{T}$$

$$2(0.4)(1.14) = \frac{1}{T}$$

$\Rightarrow T = 1.096$

Hence, $T = 1.096$

$K = 1.4$

(ii) Let PD controller gain be:

$G_C(s) = K_P + sK_D$

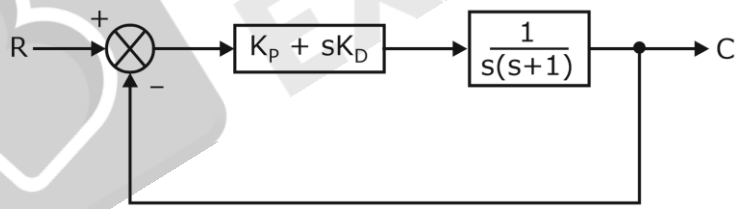

Overall open loop transfer function becomes:

$$G(s)H(s) = \frac{K_P + sK_D}{s(s+1)}$$

Or, $G(j\omega)H(j\omega) = \frac{K_P + j\omega K_D}{j\omega(1+j\omega)}$

Given, gain crossover frequency, $\omega_g = 2$ rad/sec

& phase margin, PM = 40°

PM = 180° + $\angle G(j\omega_g)\,H(j\omega_g)$ = 40°

So, $\angle G(j\omega_g)\,H(j\omega_g) = -140°$

$$\Rightarrow \tan^{-1}\left(\frac{\omega_g K_D}{K_P}\right) - 90° - \tan^{-1}(\omega_g) = -140°$$

$$\Rightarrow \tan^{-1}\left(\frac{2K_D}{K_P}\right) - 90° - \tan^{-1}(2) = -140°$$

$$\Rightarrow \tan^{-1}\left(\frac{2K_D}{K_P}\right) = 13.43°$$

$$\frac{2K_D}{K_P} = 0.24$$

Or, $K_D = 0.12\ K_P$

Also, at $\omega_g = 2$, $|G(j\omega)\ H(j\omega)| = 1$

$$\frac{\sqrt{K_P^2 + (2K_D)^2}}{2\sqrt{1+2^2}} = 1$$

$$\Rightarrow K_P^2 + 4K_D^2 = 4(1+4) = 20$$

Put, $K_D = 0.12\ K_P$

$$K_P^2 + 4(0.12K_P)^2 = 20$$

$$1.0576K_P^2 = 20$$

$K_P = 4.35$

$K_D = 0.12\ K_P$

$K_D = 0.552$

So, PD controller transfer function is

$G_C(s) = 4.35 + 0.522s$

3.(c) Consider a set of 5 processes for which arrival time, CPU time needed and the priority are given below:

Process ↓	Arrival time (ms)	CPU time needed (ms)	Priority
P_1	0	10	5th
P_2	0	5	2nd
P_3	2	3	1st
P_4	5	20	4th
P_5	10	2	3rd

(i) What will be the average waiting time if the CPU scheduling policy is SJF (without pre-emption)?

[5 Mark]

(ii) What will be the average waiting time if the CPU scheduling policy is SJF (with pre-emption)?

[5 Mark]

(iii) What will be the average waiting time if the CPU scheduling policy is priority scheduling (without pre-emption)?

[5 Mark]

(iv) What will be the average waiting time if the CPU scheduling policy is priority scheduling (with pre-emption)?

[5 Mark]

Sol. **(i)** SJF without Preemption

Process	Arrival Time	CPU Time	CT – AT TAT	TAT – BT WT
P_1	0	10	18 – 0 = 18	18 – 10 = 8
P_2	0	5	5 – 0 = 5	5 – 5 =0
P_3	2	3	8 – 2 = 6	6 – 3 = 3
P_4	5	20	40 – 5 = 35	35 – 20 = 15
P_5	10	2	20 – 10 = 10	10 – 2 = 8

Gantt chart : | P_2 | P_3 | P_1 | P_5 | P_4 |

0 5 8 18 20 40

$$\text{Average waiting time} = \frac{(8+0+3+15+8)}{5} = \frac{34}{5} = 6.8 \text{ ms}$$

(ii) SJF with Preemption

Gantt chart : | P_2 | P_3 | P_1 | P_5 | P_1 | P_4 |

0 5 8 10 12 20 40

Process	AT	BT	TAT	WT
P_1	0	10	20 – 0 = 28	20 – 10 = 10
P_2	0	5	5 – 0 = 5	5 – 5 = 0
P_3	2	3	8 – 2 = 6	6 – 3 = 3
P_4	5	20	40 – 5 = 35	35 – 20 = 15
P_5	10	2	20 – 10 = 2	2 – 2 = 0

$$\text{Average waiting Time} = \frac{10+0+3+15+0}{5} = \frac{28}{5} = 5.6 \text{ ms}$$

(iii) Priority scheduling without Preemption

Gantt chart : | P_2 | P_3 | P_4 | P_5 | P_1 |

0 5 8 28 30 40

Process	AT	BT	Priority	TAT	WT
P_1	0	10	5th	40 – 0 = 40	40 – 10 = 30
P_2	0	5	2nd	5 – 0 = 5	5 – 5 = 0
P_3	2	3	1st	8 – 2 = 6	6 – 3 = 3
P_4	5	20	4th	28 – 5 = 23	23 – 20 = 3
P_5	10	2	3rd	30 – 10 = 20	20 – 2 = 18

Average waiting time $= \frac{30+0+3+3+18}{5} = \frac{54}{5} = 10.8$ ms

(iv) Priority scheduling without Preemption

Gantt chart :

P_2	P_3	P_2	P_4	P_5	P_4	P_1

0 2 5 8 10 12 30 40

Process	AT	BT	Priority	TAT	WT
P_1	0	10	5th	40 – 0 = 40	40 – 10 = 30
P_2	0	5	2nd	8 – 0 = 8	8 – 5 = 3
P_3	2	3	1st	5 – 2 = 3	3 – 3 = 0
P_4	5	20	4th	30 – 5 = 25	25 – 20 = 5
P_5	10	2	3rd	12 – 10 = 2	2 – 2 = 0

Average waiting Time $= \frac{30+3+0+5+0}{5} = \frac{38}{5} = 7.6$ ms

4.(a) A discrete memoryless source generates either 0 or 1 at a rate of 160 kbps; 0 is generated three times more frequently than 1. A coherent binary PSK modulator is employed to transmit these bits over a noisy channel. The received bits are detected in a correlator fed with the basis function of unit energy (for this BPSK scheme) as the reference signal. The receiver makes a decision in favour of 1 if the correlator output is positive, else decides in favour of 0. If 0 and 1 are represented as

$0: \rightarrow -(6\sqrt{2}\cos 640\pi \times 10^3 t)$ V

$1: \rightarrow +(6\sqrt{2}\cos 640\pi \times 10^3 t)$ V

(i) Determine transmitted signal energy per bit. **[12 Marks]**

(ii) Determine basis function of unit energy for this binary PSK scheme. **[8 Mark]**

Sol. **(i)** Two pair of signals as,

$$s_1(t) = \sqrt{\frac{2E_b}{T_b}} \cdot \cos(2\pi f_c t) \text{[represent 1]} \quad \text{...(i)}$$

$$s_2(t) = \sqrt{\frac{2E_b}{T_b}} \cdot \cos(2\pi f_c t) \text{[represent 0]} \quad \text{...(ii)}$$

Comparing with given,

$$\sqrt{\frac{2E_b}{T_b}} = 6\sqrt{2}$$

Or, Transmitted energy/bit, $E_b = 6T_b$

Transmitted energy per bit $E_b = 36\ T_b$

$E_b = 36/R = 36/(160 \times 10^3) = 2.25 \times 10^{-4}$

(ii) From equation (i) and (ii), there is only one basis function, i.e.,

$$\phi(t) = \sqrt{\frac{2}{T_b}} \cdot \cos(2\pi f_c t)$$

Where, $T_b = \frac{1}{160 \times 10^3}$ sec

And, $\omega_c = 640\ \pi \times 10^3$

$$\therefore\ P_e = \frac{1}{2}\text{erfc}\left(\sqrt{\frac{E_b}{N_0}}\right)$$

$$P_e = \frac{1}{2}\left(1 - \text{erf}\left(\sqrt{\frac{E_b}{N_0}}\right)\right)$$

$$P_e = \frac{1}{2}\left[1 - \text{erf}(0.25)\right]$$

Since, erf (0.25) = 0.276

$$\therefore\ P_e = \frac{1}{2}(1 - 0.276) = 0.362$$

4.(b) For the system shown below,

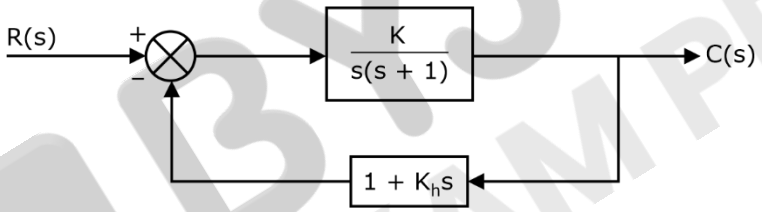

Draw the root-locus with $K_h = 0$ and K as variable. Obtain the value of K so that the system damping ratio is 0.158.

For the obtained value of K, draw the root-locus with K_h as variable.

Find the value of K_h that improves the system damping ratio to 0.5.

[20 Marks]

Sol. $K_h = 0$

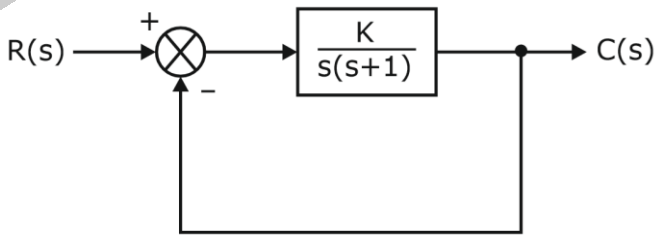

OLTF ⇒ open loop transfer function is,

$$G(s)H(s) = \frac{K}{s(s+1)}$$

Open loop zeros: NIL

Z = No. of open loop zeros = 0

Open loop poles: s = 0, − 1

P = No. of open loop poles = 2

Name of branches, N = max. (P, Z) = max (2, 0) = 2

Starting point (K = 0)

Root locus branches starts from open loop poles

i.e., s = 0, – 1

Ending points (K → ∞)

Root locus branches terminates at ∞

Number of asymptotes

n = P – Z = 2 – 0 = 2

Angle of asymptotes with real axis

$$\theta = (2k+1)\times\frac{180^\circ}{n},\ k = 0, 1, \ldots\ldots, n-1$$

$$\Rightarrow\ \theta = (2k+1)\times\frac{180^\circ}{2} = 90^\circ, 270^\circ$$

Centroid: Intersection of asymptotes on real axis

$$x = \frac{\sum \text{poles} - \sum \text{zeros}}{P - Z}$$

$$x = \frac{(0-1)-(0)}{2-0} = \frac{-1}{2}$$

Existence of root locus on real axis:

Root locus will exist on section of real axis if total number of poles and zeroes to the right of that section is an odd number i.e., between s = 0 and s = –1

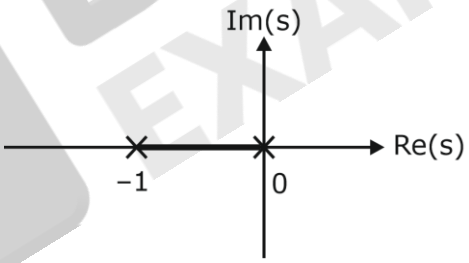

Breakaway points:

Characteristic equation is $1 + \frac{K}{s(s+1)} = 0$

$s^2 + s + K = 0$

So, $K = -(s^2 + s)$

Solve $\frac{dK}{ds} = 0$

$\Rightarrow\ -(2s + 1) = 0$

s = –1/2 = –0.5 ⇒ it lies on root locus

So, s = –0.5 is a valid breakaway point.

As per above calculations, root locus plot is plotted below”

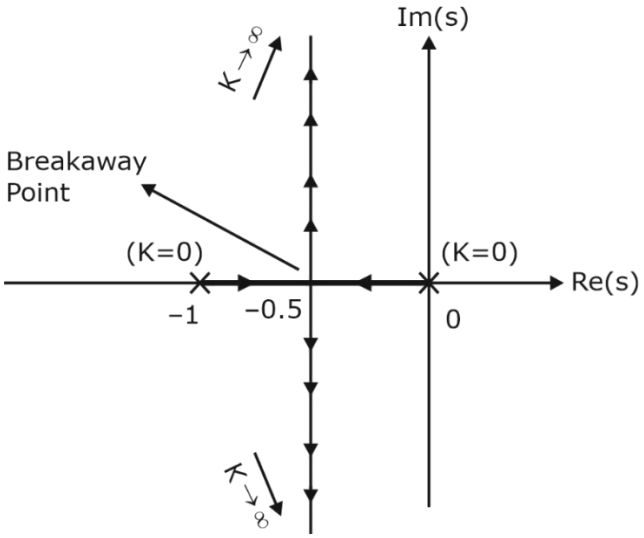

Now, given, $\xi = 0.158 = \cos\phi$

$\Rightarrow \varphi = 80.9°$

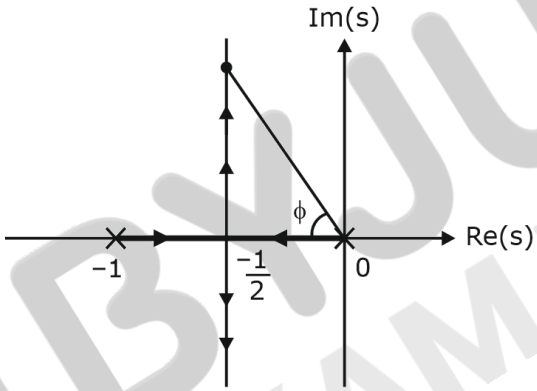

$$\tan\phi = \frac{y}{x}$$

$$\tan 80.9° = \frac{y}{1/2}$$

y = 3.12

So, point A is (−0.5, 3.12) and it lies on root locus

So, at A, |G(s) H(s)| = 1

$$\left|\frac{K}{s(s+1)}\right| = 1$$

Put s = −0.5 + j3.12

$$\left|\frac{K}{(-0.5+j3.12)(0.5+j3.12)}\right| = 1$$

K = 9.9844 ≃ 10

So, K ≃ 10

Now, with K = 10 and K_h as variable, characteristics equation is,

$$1 + \frac{10(1+K_h s)}{s(s+1)} = 0$$

$\Rightarrow (s^2 + s + 10) + 10K_h s = 0$

$$\Rightarrow 1+\left(\frac{10s}{s^2+s+10}\right)K_h=0$$

Let open loop transfer function is,

$$G(s)\,H(s)=\left(\frac{10s}{s^2+s+10}\right)K_h=0$$

OLZ ⇒ s = 0

Z = 1

$$\text{OLP} \Rightarrow s=\frac{-1\pm\sqrt{1-40}}{2\times 1}$$

s = −0.5 ± j3.122

The pole zero plot is shown below:

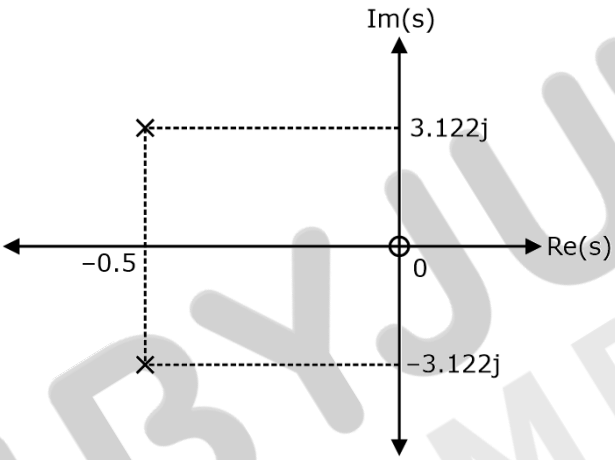

Poles, P = 2

Zeros, Z = 1

$$\text{Angle of asymptote}=\frac{(2k+1)180^\circ}{P-Z}$$

Where k = 0, 1, …… P − Z − 1

∴ k = 0

∴ $\phi_A = 180^\circ$

Now finding breakaway point by solving $\frac{dK_h}{ds}=0$

The characteristic equation is given by,

1 + G(s)H(s) = 0

s(s + 1) + 10 + 10 K_hs = 0

$$K_h=\frac{-\left[s(s+1)+10\right]}{10s}$$

$$\frac{dK_h}{ds}=\frac{d}{ds}\left[-\left[\frac{s(s+1)+10}{10s}\right]\right]$$

$$\frac{10s[2s+1]-(s^2+s+10)10}{(10s)^2}=0$$

$s[2s + 1] - (s^2 + s + 10) = 0$

$s^2 = 10$

$s = \pm 3.162$

So, s = −3.162 is valid breakaway point.

There are complex poles, so we will find angle of departure ϕ_D at complex pole.

$\phi_D = \pm[180+\phi]$

Where, $\phi = \Sigma\phi_z - \Sigma\phi_p$

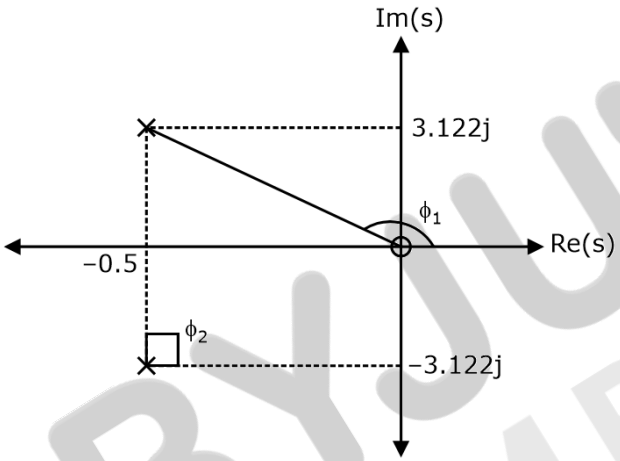

$\phi = \phi_1 - \phi_2 = 99.09 - 90 = 9.09$

$\therefore \quad \phi_D = \pm[180+9.09] = \pm 189.09$

The root locus will be

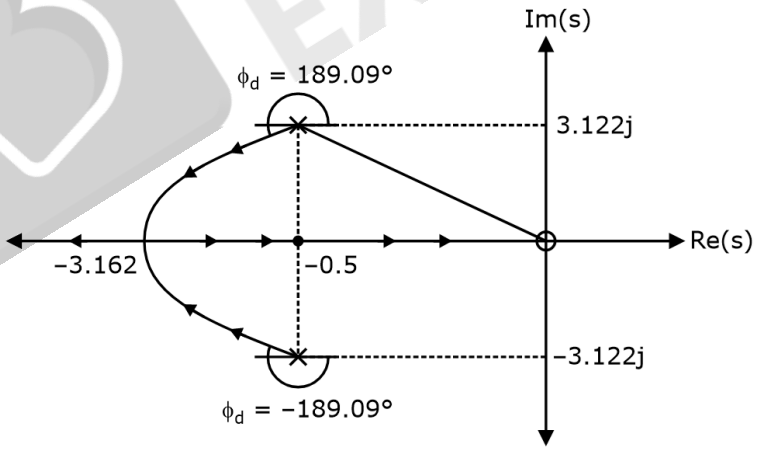

For finding K_h by given damping ratio = 0.5

Characteristic equation is,

$1 + G(s)H(s) = 0$

$s^2 + s + 10 + 10K_h s = 0$

$s^2 + (1 + 10K_h)s + 10 = 0$

Comparing with standard 2nd order system

$2\xi\omega_n = 1 + 10K_h$

$\omega_n^2 = 10$

$\omega_n = \sqrt{10}$ rad/sec

$$K_h = \frac{\left(2 \times 0.5 \times \sqrt{10} - 1\right)}{10}$$

$K_h = 0.216$

4.(c) (i) A processor array has 512 processors. Each processor is capable of adding a pair of integers in 1μ second. What is the performance (operations per second) of this processor array adding two integer vectors of length 1000, assuming each vector is allocated to the processors in a balanced fashion?

[10 Marks]

(ii) A processor array has 512 processors. Each processor is capable of adding a pair of integers in 1μ second. What is the performance (operations per second) of this processor array adding two integer vectors of length 512, assuming each vector is allocated to the processors in a balanced fashion?

[10 Marks]

Sol. (i) Processor array of size 512.

P_0	P_1	P_2	-----	P_{509}	P_{510}	P_{511}

Each processor can add two integers in 1μ sec.

To add 2 vectors of length 1000.

$(V_1 + V_2)$

P_0	P_1	P_2	-----	P_{509}	P_{510}	P_{511}

$V_1[0]$ $V_1[1]$ $V_1[2]$ ..... $V_1[509]$ $V_1[510]$ $V_1[511]$

+

$V_2[0]$ $V_2[1]$ $V_2[2]$ ..... $V_2[509]$ $V_2[510]$ $V_2[511]$

(Perform the operation in parallel) requires 1μsec.

To add remaining 1000 – 512 = 488 pairs of integers.

It can be done parallelly by 488 processors in 1μ sec.

$$\text{Performance} = \frac{\text{No. of operations}}{\text{Time taken}}$$

$$\text{Performance} = \frac{1000 \text{ Additions}}{2\ \mu\text{sec}}$$

$$\text{Performance} = \frac{1000}{2 \times 10^{-6}} = 500 \times 10^6 \text{operations / sec}$$

(ii) Similarly, to add vector of size 512.

P_0	P_1	P_2	-----	P_{510}	P_{511}

$V_1[0]$ $V_1[1]$ $V_1[2]$ ..... $V_1[510]$ $V_1[511]$

+

$V_2[0]$ $V_2[1]$ $V_2[2]$ ..... $V_2[510]$ $V_2[512]$

Perform the addition operation in parallel manner.

⇒ It requires 1μsec

$$\text{Performance} = \frac{512 \text{ addtions}}{1\mu \text{ sec}}$$

Performance = 512×10^6 operations/sec

SECTION-'B'

5.(a) What are the causes of attenuation of light signal through the optical fiber? A certain optical fiber has an attenuation of 0.6 dB/km at 1300 nm and 0.3 dB/km at 1550 nm. Suppose the following two optical signals are launched simultaneously into the fiber: an optical power of 150 μW at 1300 nm, and an optical power 100 μW at 1550 nm. What are the power levels in μW of these two signals at (i) 8 km, and (ii) 20 km?

[10 Marks]

Sol. The attenuation of light signals through optical fibers can occur due to several factors. Here are some common causes of attenuation:

1. Absorption: Optical fibers can absorb a portion of the light signal as it propagates through the material. This absorption can be caused by impurities in the fiber material or by the transmission medium itself. Different materials have different absorption characteristics at various wavelengths.
2. Scattering: Scattering refers to the phenomenon where light is redirected in different directions due to irregularities or impurities in the fiber. There are two main types of scattering: Rayleigh scattering and Mie scattering. Rayleigh scattering occurs when the size of the scattering particles or irregularities in the fiber is smaller than the wavelength of light, while Mie scattering occurs when the scattering particles are larger than the wavelength.
3. Bending losses: When an optical fiber is bent or curved, some of the light can escape due to bending losses. This occurs because the light rays experience different propagation paths within the fiber, causing them to interact with the fiber material differently. Bending losses can be minimized by using fibers with larger core diameters or by carefully designing the fiber's curvature.
4. Dispersion: Dispersion refers to the spreading or separation of light pulses as they propagate through the fiber. There are two main types of dispersion: chromatic dispersion and modal dispersion. Chromatic dispersion occurs because different wavelengths of light travel at slightly different speeds, causing the pulse to spread. Modal dispersion occurs in multimode fibers where different propagation paths (modes) have different speeds, resulting in pulse spreading.
5. Connector losses: When connecting two optical fibers, there can be losses at the interface between them. These losses can occur due to misalignment, reflections, or imperfections in the connector surfaces. Connector losses can be reduced by using high-quality connectors and ensuring proper alignment during installation.

Loss_{dB} = Attenuation × Distance .... (i)

$$\text{Loss}_{dB} = 10\log\left(\frac{\text{Power}_R}{\text{Power}_T}\right) \quad .... \text{(ii)}$$

Substituting equation (i) into equation (ii) we get the following:

$$\text{Attenuation (dB / km)} \times \text{Distance (km)} = 10 \times \log\left(\frac{\text{Power}_R(W)}{\text{Power}_T(W)}\right)$$

$$\log\left(\frac{\text{Power}_R}{\text{Power}_T}\right) = \frac{\text{Attenuation} \times \text{Distance}}{10}$$

$$\frac{\text{Power}_R}{\text{Power}_T} = 10^{\frac{\text{Attenuation} \times \text{Distance}}{10}}$$

$$\text{Power}_R = \text{Power}_T \times 10^{\frac{\text{Attenuation} \times \text{Distance}}{10}}$$

At 1500 nm after 20 km:

$$\text{Power}_R = 100 \times 10^{-6} \times 10^{\frac{-0.3 \times 20}{10}}$$

Power_R = 25.1189 μW

The combined power at the input and output ends will be:

The combined power at the input:

$P_{Total} = P_{1300} + P_{1550}$

P_{Total} = 150 μW + 100μW

P_{Total} = 250 μW

(i) The combined power at the output after 8 km:

$P_{Total} = P_{1300} + P_{1550}$

P_{Total} = 49.6697μW + 57.594 μW

P_{Total} = 107.264 μW

(ii) The combined power at the output after 20 km:

$P_{Total} = P_{1300} + P_{1550}$

P_{Total} = 9.46436 μW + 25.1189 μW

P_{Total} = 34.5833 μW

Substituting equation (i) into equation (ii) we get the following:

$\text{Loss}_{dB} = 10 \times \log(1 - \text{Loss})$ ....(iii)

$$\text{Attenuation} = \frac{\text{Loss}_{dB}}{\text{Distance}} \quad \text{....(iv)}$$

Substituting equation (iii) into equation (iv) we get the following:

$$\text{Attenuation} = \frac{10 \times \log(1 - \text{Loss})}{\text{Distance}}$$

$$\text{Attenuation} = \frac{10 \times \log(1 - 0.55)}{3.5}$$

Attenuation = −0.990821 dB / km

Since the name attenuation implies loss then we could take out the negative sign:

Attenuation = 0.99021 dB / km ≈ 1dB / km

5.(b) Consider the unity-feedback system having forward transfer function

$$G(s) = \frac{K}{s(Js+F)}.$$

The Bode plot of G(s) is shown below as asymptotic approximation:

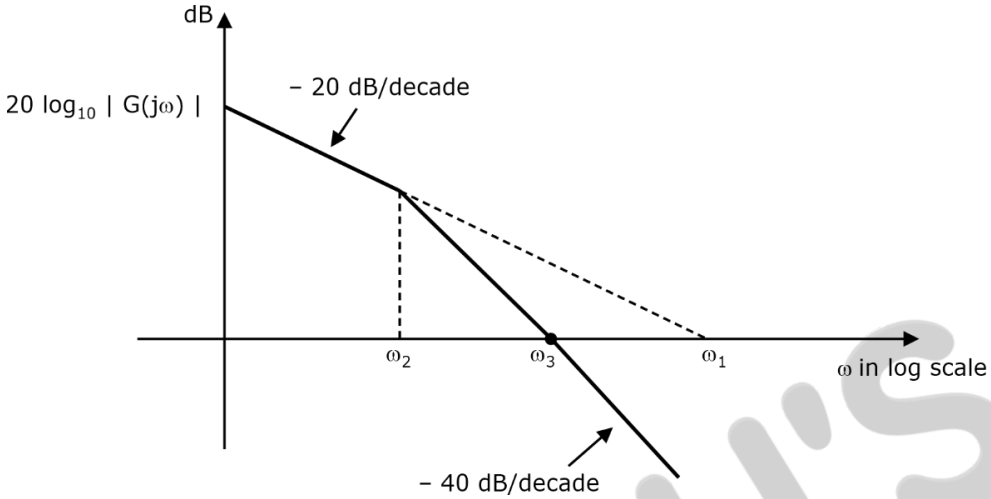

Express the relation between ω_1, ω_2 and ω_3. Also find the static velocity error coefficient K_v of this system. You assume $\omega_2 \ll \omega_3$.

[10 Marks]

Sol.

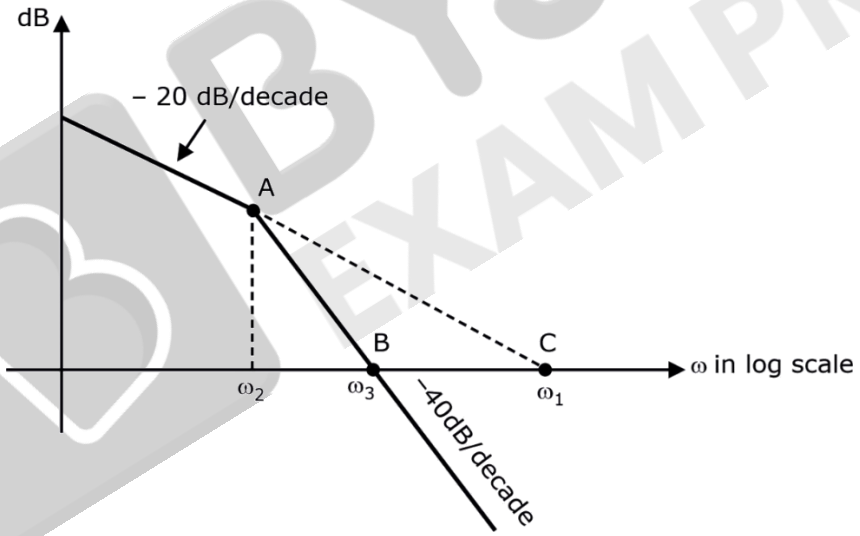

$$G(s) = \frac{K}{s(Js+F)} = \frac{K/F}{s\left(1+\frac{J}{F}s\right)}$$

Corner frequencies: $\omega = \omega_2 = \frac{1}{J/F} = \frac{F}{J}$

Initial part formula: (for $\omega \le \omega_2$)

$M = -20n\log\omega + 20\log(K/F)$

Here, n = 1

So, at $\omega = \omega_2 \Rightarrow M = -20\log\omega_2 + 20\log(K/F)$

Put, $\omega_2 = \frac{F}{J}$

$$M = -20\log\left(\frac{F}{J}\right) + 20\log\left(\frac{K}{F}\right) = 20\log\left(\frac{K/F}{F/J}\right)$$

$$M = 20\log\left(\frac{KJ}{F^2}\right) \qquad ....(i)$$

Now, use slope formula between A and B:

$$\text{Slope} = -40 = \frac{0 - 20\log\left(\frac{KJ}{F^2}\right)}{\log\left(\frac{\omega_3}{\omega_2}\right)}$$

$$\log\left(\frac{\omega_3}{\omega_2}\right) = \frac{1}{2}\log\left(\frac{KJ}{F^2}\right) = \log\left(\frac{\sqrt{KJ}}{F}\right)$$

$$\Rightarrow \frac{\omega_3}{\omega_2} = \frac{\sqrt{KJ}}{F} \qquad ...(ii)$$

Now, ω_1 is the frequency at which initial part cuts 0 dB axis.

$$\text{So, } \omega_1 = \left(\frac{K}{F}\right)^{\frac{1}{n}} = \left(\frac{K}{F}\right)^1 \qquad ....(iii)$$

Now, use slope formula between A and C:

$$\text{Slope} = -20 = \frac{0 - 20\log\left(\frac{KJ}{F^2}\right)}{\log\omega_1 - \log\omega_2}$$

$$\log\left(\frac{\omega_1}{\omega_2}\right) = \log\left(\frac{KJ}{F^2}\right)$$

$$\frac{\omega_1}{\omega_2} = \frac{KJ}{F^2}$$

$$\text{So, } \omega_2 = \frac{F^2}{KJ} \times \frac{K}{F} = \frac{F}{J} \qquad ....(iv)$$

$$\text{So, from (ii), } \omega_3 = \frac{\sqrt{KJ}}{F} \times \frac{F}{J} = \sqrt{\frac{K}{J}} \qquad ....(v)$$

$$\text{So, } \omega_1 = \frac{K}{F}$$

$$\omega_2 = \frac{F}{J}$$

$$\omega_3 = \sqrt{\frac{K}{J}}$$

So, $\omega_1\omega_2 = \omega_3^2$

So, ω_3 is the G.M. of ω_1 & ω_2.

$$\text{Now, } K_v = \lim_{s\to 0} sG(s) = \lim_{s\to 0} s\frac{K}{s(Js+F)} = \frac{K}{F}$$

$$\text{Or, } K_v = \frac{K}{F} = \omega_1$$

5.(c) The seek time of a disk is 30 ms. It rotates at the rate of 30 rotations per second. Each track has a capacity of 300 words. What will be the access time?

[10 Marks]

Sol. Seek time = 30 msec

1 second = 30 rotations

1 rotation takes $\frac{1}{30}$ seconds

Avg. rotation delay = $\frac{1}{60}$ sec = 16.66 msec

Access time = Seek time + Avg. rotation delay

Access time = 30 + 16.66 = 46.66 msec

(Transfer time is neglected here)

5.(d) A wave at 10 GHz propagates in a rectangular waveguide with inner dimensions a = 1.5 cm and b = 0.6 cm. The conductivity of the waveguide walls is $\sigma = 1.57 \times 10^7$ S/m. The waveguide is filled with polyethylene with $\varepsilon_r = 2.25$ and $\mu_r = 1$.

Calculate the guide wavelength and the wave impedance of the waveguide. Assume that dominant mode is propagating. Also determine the attenuation constant due to loss in the dielectric. The loss tangent of the polyethylene may be taken as 4×10^{-4} and the value of ε_0 is 8.854×10^{-12} F/m.

[10 Marks]

Sol. a = 1.5 cm

b = 0.6 cm

a > b, dominant mode is TE_{10}

Cut-off frequency for TE_{10} mode is,

$$f_c = \frac{u'}{2a}$$

$$u' = \frac{1}{\sqrt{\mu\varepsilon}} = \frac{1}{\sqrt{\mu_0 \times 2.25\varepsilon_0}} = 2 \times 10^8$$

$$f_c = \frac{2 \times 10^8}{2(1.5 \times 10^{-2})} = 6.67 \text{ GHz}$$

Guide wavelength, $\lambda_g = \frac{\lambda'}{\sqrt{1 - \left(\frac{f_c}{f}\right)^2}}$

$$\lambda' = \frac{u'}{f} = \frac{2 \times 10^8}{10 \times 10^9} = 0.02\text{m} = 2\text{cm}$$

$$\lambda_g = \frac{0.02}{\sqrt{1 - \left(\frac{6.67}{10}\right)^2}} = 0.0268 \text{ m} = 2.68 \text{ cm}$$

Wave impedance, $\eta_{TE} = \dfrac{\eta'}{\sqrt{1-\left(\dfrac{f_c}{f}\right)^2}}$

$$\eta' = \sqrt{\frac{\mu}{\varepsilon}} = \sqrt{\frac{\mu_0}{2.25\varepsilon_0}} = 80\pi\ \Omega$$

$$\eta_{TE} = \frac{80\pi}{\sqrt{1-\left(\dfrac{6.67}{10}\right)^2}} = 337.32\Omega$$

Now, $\tan\theta = \dfrac{\sigma}{\omega\varepsilon}$

Or, $\sigma = \omega\varepsilon \tan\theta$

$$\sigma = (2\pi\times 10\times 10^9)\left(2.25\times\frac{1}{36\pi}\times 10^{-9}\right)(4\times 10^{-4})$$

$\sigma = 5 \times 10^{-4}$

Attenuation constant due to loss in dielectric is,

$$\alpha_d = \frac{\sigma\eta'}{2\sqrt{1-\left(\dfrac{f_c}{f}\right)^2}} = \frac{(5\times 10^{-4})(80\pi)}{2\sqrt{1-\left(\dfrac{6.67}{10}\right)^2}}$$

$\Rightarrow \alpha_d = 0.08433$ Np/m

5.(e) What will be the execution time for the instruction "STA addr" of 8085 with a clock frequency of 3 MHz? Number of T-states required by the instruction is 13.

[10 Marks]

Sol. Clock frequency $f_c = 3$ MHz

Clock period $T_C = \dfrac{1}{f_c} = \dfrac{1}{3\times 10^6} = 0.33\ \mu\text{sec}$

STA 16-bit Address

Eg. STA 4050

Store the content of accumulator to memory address 4050 H.

4 machine cycle.

①	opcode Fetch	4T	state
②	memory Read	3T	state
③	memory Read	3T	state
④	memory Write	3T	state
	Total	13	T state

∴ Execution time = 13 × 1/3 = 4.33 nsec

Note: STA 16-bit address is a data transfer instruction and addressing mode is direct addressing mode.

It is a 3-byte instruction.

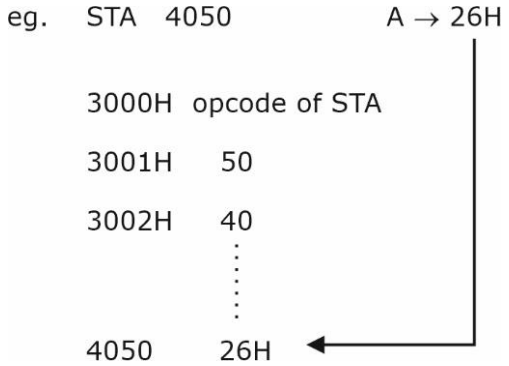

5.(f) Illustrate hop-to-hop (node-to-node) delivery by the data link layer.

[10 Marks]

Sol. Figure given below illustrates hop-to-hop (node-to-node) delivery by the data link layer.

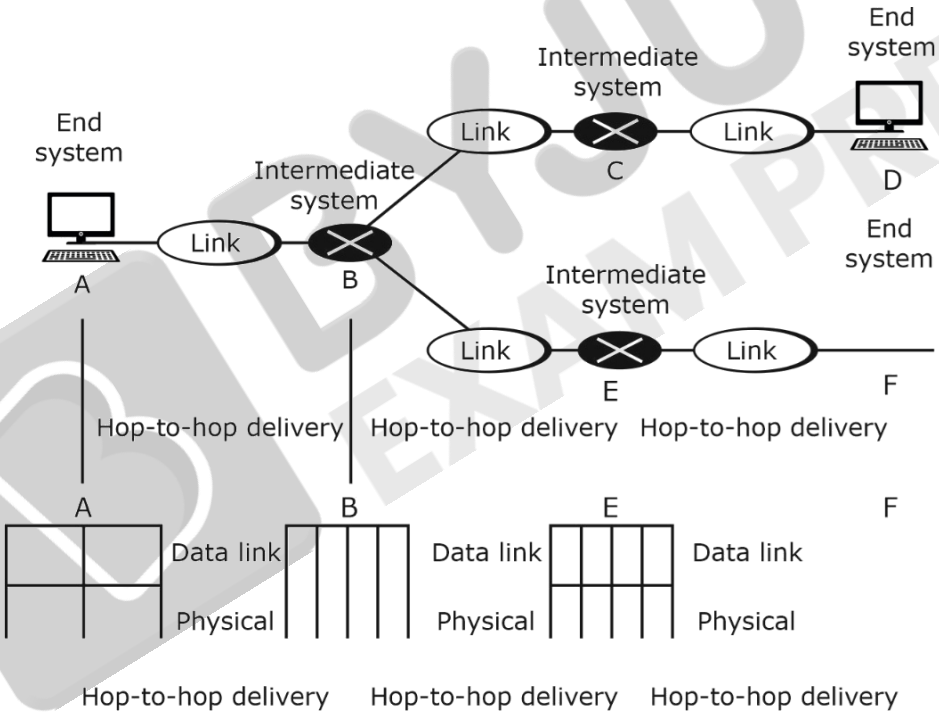

As the figure shows, communication at the data link layer occurs between two adjacent nodes. To send data from A to F, three partial deliveries are made. First, the data link layer at A sends a frame to the data link layer at B (a router). Second, the data link layer at B sends a new frame to the data link layer at E. Finally, the data link layer at E sends a new frame to the data link layer at F. Note that frames that are exchanged between the three nodes have different values in the headers. The frame from A to B has B as the destination address and A as the source address. The frame from B to E has E as the destination address and B as the source address. The frame from E to F has F as the destination address and E as the source address. The values of the trailers can also be different if error checking includes the header of the frame.

6.(a) A 50 Ω transmission line has phase velocity $v_p = 2.1 \times 10^8$ m/s. It is terminated by a load Z_L which has a value of

$$Z_L = 75 + j25\ \Omega \text{ at a frequency of } f = 29.6 \text{ MHz.}$$

Find the two closest positions to the load along the line where the real part of the line impedance is equal to the characteristic impedance of the line.

[20 Marks]

Sol.

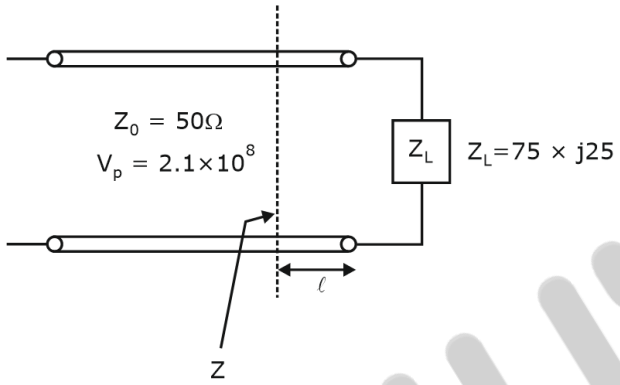

At a distance 'l' from load, impedance is

$$Z = z_0\left[\frac{z_L + jz_0 \tan\beta l}{z_0 + jz_L + \tan\beta l}\right]$$

Let $\tan\beta l = x$

$$z = 50\left(\frac{75 + j25 + j50x}{50 + j(75 + j25)x}\right) = 50\left(\frac{3 + j + j2x}{2 + j(3 + j)x}\right)$$

$$= 50\left[\frac{[3 + j(1 + 2x)]}{(2 - x) + j3x}\right]$$

$$Z = 50\left(\frac{(3 + j(1 + 2x)(2 - x) - j3x)}{(2 - x)^2 + (3x)^2}\right)$$

$$R_e\{Z\} = 50\left(\frac{3(2 - x) + (1 + 2x)3x}{(2 - x)^2 + (3x)^2}\right)$$

We need $R_e\{Z\} = Z_0$

$$50\left[\frac{3(2 - x) + (1 + 2x)3x}{(2 - x)^2 + (3x)^2}\right] = 50$$

$6 - 3x + 3x + 6x^2 = 4 + x^2 - 4x + 9x^2$

$6 + 6x^2 = 4 - 4x = + 10x^2$

$\Rightarrow 4x^2 - 4x - 2 = 0$

Or, $2x^2 - 2x - 1 = 0$

$x = \tan\beta l = 1.36, -0.36$

$$\beta = \frac{\omega}{v_p} = \frac{2\pi(29.6 \times 10^6)}{2.1 \times 10^8} = 0.89$$

$\beta l_1 = \tan^{-1}(1.36) = 0.94$

$l_1 \cong 1.05$ m

Or, $\beta l_2 = \tan^{-1}(-0.36)$

$= -0.34 = \pi - 0.34$

$\beta l_2 = 2.79$

$l_2 = 3.14$ m

Therefore, $l_1 = 1.05$ m and $l_2 = 3.14$ m

6.(b) (i) An analog filter has a transfer function

$$H(s) = \frac{10}{s^2 + 7s + 10}$$

Design a digital filter equivalent to this using impulse invariant method for T = 0.2 s.

[10 Marks]

(ii) Calculate the filter coefficient for a 5-tap FIR Bandpass filter with a lower cut-off frequency of 2 kHz and an upper cut-off frequency of 2.4 kHz at a sampling rate of 8 kHz.

[10 Marks]

Sol. (i) Given data:

Analog filter transfer function:

$$H(s) = \frac{10}{s^2 + 7s + 10}$$

T = 0.2 sec

Method : Impulse invariance technique

Now, $$H(s) = \frac{10}{(s+5)(s+2)} = \frac{10}{3}\left[\frac{1}{s+2} - \frac{1}{s+5}\right]$$

By taking inverse LT,

$$h(t) = \frac{10}{3}\left[e^{-2t}u(t) - e^{-5t}u(t)\right]$$

By performing sampling h(t) at t = nT = 0.2 n,

We can write,

$$h(n) = \frac{10}{3}\left[e^{-2\times 0.2n}u(n) - e^{-5\times 0.2n}u(n)\right] = \frac{10}{3}\left[\left(e^{-0.4}\right)^n u(n) - \left(e^{-1}\right)^n u(n)\right]$$

By applying ZT,

$$H(z) = \frac{10}{3}\left[\frac{1}{1 - e^{-0.4}z^{-1}} - \frac{1}{1 - e^{-1}z^{-1}}\right]$$

Therefore, digital filter transfer function is,

$$H(z) = \frac{10\left(e^{-0.4} - e^{-1}\right)z^{-1}}{3\left(1 - e^{-0.4}z^{-1}\right)\left(1 - e^{-1}z^{-1}\right)}$$

$$\Rightarrow \quad H(z) = \frac{10\left(e^{-0.4} - e^{-1}\right)z^{-1}}{3\left[1 - \left(e^{-0.4} + e^{-1}\right)z^{-1} + e^{-1.4}z^{-2}\right]}$$

(ii) Given data:

BPF with f_{c1} = 2 kHz and f_{c2} = 2.5 kHz

f_s = 8 kHz

Filter length : M = 5

Cut-off frequency of digital filter,

$$\omega_{c1} = \frac{\Omega_{c1}}{f_s} = \frac{2\pi f_{c1}}{f_s} = \frac{2\pi \times 2 \times 10^3}{8 \times 10^3} = \frac{\pi}{2} \text{rad/sample}$$

$$\omega_{c2} = \frac{\Omega_{c2}}{f_s} = \frac{2\pi f_{c2}}{f_s} = \frac{2\pi \times 2.5 \times 10^3}{8 \times 10^3} = \frac{5\pi}{8} \text{rad/sample}$$

Now, $$H_d(\omega) = \begin{cases} 1, & \frac{\pi}{2} < |\omega| < \frac{5\pi}{8} \\ 0, & \text{otherwise} \end{cases}$$

By taking inverse DTFT,

$$h_d(n) = \frac{1}{2\pi}\int_{-\pi}^{\pi} H_d(\omega)e^{j\omega n}d\omega = \frac{1}{2\pi}\left[\int_{-\omega_{c2}}^{-\omega_{c1}} 1 \cdot e^{j\omega n}d\omega + \int_{\omega_{c1}}^{\omega_{c2}} 1 \cdot e^{j\omega n}d\omega\right]$$

$$= \frac{\sin(n\omega_{c2})}{\pi n} - \frac{\sin\omega_{c1}}{\pi n}$$

Put n = 0; $h_d(0) = \frac{\omega_{c2} - \omega_{c1}}{\pi} = \frac{\frac{5\pi}{8} - \frac{\pi}{2}}{\pi} = 0.125$

$$h_d(-1) = h_d(1) = \frac{\sin\left(\frac{5\pi}{8}\right) - \sin\frac{\pi}{2}}{\pi} = -0.024$$

$h_d(2) = h_d(2) = 0.112$

Thus, the digital filter impulse response is,

$$h_d(n) = \{-0.112, -0.024, \underset{\uparrow}{0.125}, -0.024, -0.112\}$$

But the above filter is non-causal. So, for causal type filter, the desired impulse-response will be

$$h_c(n) = h_d(n-2) = \{-\underset{\uparrow}{0.112}, -0.024, 0.125, -0.024, -0.112\}$$

6.(c) (i) A digital fiber optical link working at 850 nm requires a maximum Bit Error Rate (BER) of 10^{-10} at a Data Rate (DR) of 20 Mbps for a simple binary level signalling scheme. Take detector quantum efficiency as 1. [h = 6.626 × 10^{-34} J.s]

Determine the incident optical power that must fall on the photo detector to achieve the above-mentioned BER and DR.

[10 Marks]

(ii) An optic fiber system uses a directly-modulated Distributed Feed-Back (DFB) laser as an optical source at the transmitter. If the operating bit rate = 2.5 Gbps, the dispersion

parameter = 10 ps/(nm-km) and RMS spectral width of the pulse = 0.15 nm. Determine the maximum transmission distance.

[10 Marks]

Sol. **(i)** For maximum BER,

$$P_r(0) = e^{-\bar{N}} = 10^{-10}$$

$$\bar{N} = 10 \ln 10 = 23$$

Hence, an average of 23 photons per pulse is required for this BER.

$$E = \frac{2h\nu}{\eta}$$

The next step is to find the minimum incident optical power P_i that must fall on the photodetector to achieve a 10^{-10} BER at a data of 20 Mbps for a simple binary level signaling scheme. If the detector quantum efficiency η = 1, then

$$E = P_i\tau = 23 \;\; h\nu = \frac{23hc}{\lambda}$$

Where $\frac{1}{\tau}$ is one half the data rate B, $\frac{1}{\tau} = \frac{B}{2}$

$$P_i = \frac{23hc}{\lambda} \times \frac{1}{\tau}$$

$$P_i = \frac{23hc}{\lambda} \times \frac{B}{2}$$

$$P_i = \frac{23 \times 6.626 \times 10^{-34} \times 3 \times 10^{8} \times 20 \times 10^{6}}{2(0.85 \times 10^{-6})}$$

P_i = 53.78 pW = –72.7 dBm

(ii) Consider the expression to find the maximum transmission distance in a directly-modulated distributed-feedback (DFB) laser.

$$L < \frac{1}{4R_B \,|\, D \,|\, \sigma_\lambda} \qquad \text{.... (i)}$$

Here, L is the maximum transmission distance of the DFB laser, R_s is the transmission bit rate, D is the dispersion parameter and σ_λ is the root mean square (RMS) spectral width of the optical pulse.

$$L < \frac{1}{4 \times 2.5 \times 10^{9} \times 0.15 \times 10^{-9} \times 10 \times 10^{-12}}$$

L < 66.67 km

7.(a) The scattering matrix of a two-port network is given by

$$[S] = \begin{bmatrix} 0.1\angle 0 & 0.8\angle 90^\circ \\ 0.8\angle 90^\circ & 0.2\angle 0 \end{bmatrix}$$

(i) Determine whether the network is reciprocal or lossless.

[5 Mark]

(ii) If a short circuit is placed on port 2, what will be the resulting return loss at port 1?

[15 Marks]

Sol. $S = \begin{bmatrix} 0.1\angle 0^\circ & 0.8\angle 90^\circ \\ 0.8\angle 90^\circ & 0.2\angle^\circ \end{bmatrix} = \begin{bmatrix} 0.1 & 0.8j \\ 0.8j & 0.2 \end{bmatrix}$

(i) [S] matrix is symmetric, so network is reciprocal.

For lossless network,

$$\sum_{j=1}^{N} S_{ii} S^*_{ji} = 1, \text{ for all } i$$

Solving for first row,

$|S_{11}|^2 + |S_{12}|^2 = (0.1)^2 + (0.8)^2 = 0.65 \pm 1$

So, the network is not lossless.

(ii) $V_1^- = S_{11}V_1^+ + S_{12}V_2^+$ ... (1)

$V_2^- = S_{21} V_1^+ + S_{22} V_2^+$ .... (2)

Port 2 is short circuited, So, $V_2^+ = -V_2^-$

Using (2), $V_2^- = S_{21}V_1^+ - S_{22}V_2^-$

Or, $\dfrac{V_2^-}{V_1^+} = \dfrac{S_{21}}{1+S_{22}}$ .... (3)

In equation (1)

$V_1^- = S_{11}V_1^+ - S_{12}V_2^-$

Divide by V_1^+

$$\frac{V_1^-}{V_1^+} = S_{11} - S_{12}\frac{V_2^-}{V_1^+}$$

So, Input, reflection coefficient,

$$K = \frac{V_1^-}{V_1^+} = S_{11} - S_{12}\left(\frac{S_{21}}{1+S_{22}}\right)$$

$$= 0.1 - \frac{(0.8j)(0.8j)}{1+0.2}$$

$$k = 0.1 - \frac{-0.64}{1.2} = 0.633$$

So, return, loss is RL = −20log|K| = −20log (0.633)

RL = 3.96 dB

7.(b) Write an 8085 assembly language program to sort N numbers in descending order where value of N is available in memory location 9000 H. Also note that numbers are stored in consecutive memory locations starting from 9001 H.

[20 Marks]

Sol. Program:-

```
Label:
        LXI H, 9000H    ;   Load HL with 9000 H
        MOV C, M        ;   C = N
        DCR C           ;   (C) = N – 1
REPEAT: MOV B, C        ;   (B) = N – 1
        LXI H, 9001H    ;   (HL) = 9001H
LOOP:   MOV A, M        ;   Load A by data at 9001 H
        INX H           ;   (HL) = 9002 H
        CMP M           ;   Compare data at 9002 H with A
        JNC SKIP        ;
        MOVD, M         ;   If data in next
        MOV M, A        ;   Memory location
        DCX H           ;   > A, exchange data
        MOV M, D        ;
        INX H
SKIP    DCR B
        JNZ LOOP
        DCR C
        JNZ REPEAT
        HLT
```

Description of Program

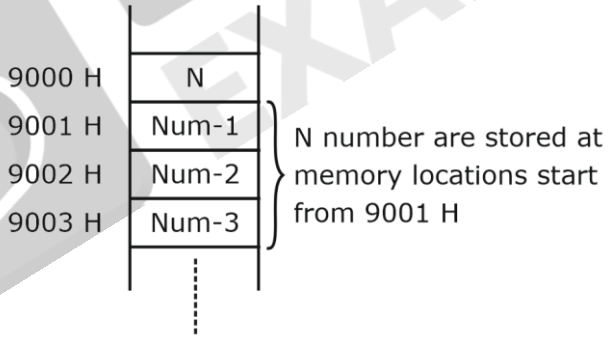

a. Utilization of HL pair as memory location

b. Store N in register C

c. Store N – 1 Register B

d. Copy Num-1 in Accumulator from memory location 9001

e. Compare it with num-2 in the next location.

f. If Num-2 > num 1 then exchange their location i.e.

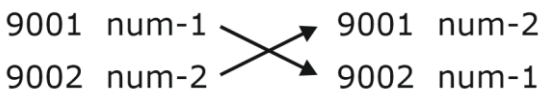

g. Decrement B i.e., B = B – 1

h. Repeat steps d, e, f, g for locations 9002, 9003, 9004 and so on till B register becomes 0.

i. C → C – 1

j. Repeat steps from c to i till register C becomes 0.

7.(c) (i) In the downlink of a GSM system, the carrier frequency is 950 MHz and according to GSM specifications the receiver sensitivity is –102 dBm. The output power of the transmitter amplifier is 30 W. The antenna gain of the transmitter antenna is 12 dB, and the aggregate attenuation of connectors, combiners, etc. is 7 dB. The fading margin is 12 dB and breakpoint d_{break} is at a distance of 100 m. What distance can be covered? Take path loss exponent as 3.5.

[10 Marks]

(ii) It is required to keep track of Mach 8 (1 Mach = 330 m/s) missiles coming towards a ship (positive Doppler shifts only) from a 500 km range with an L-band (λ ≈ 30 cm) radar. The perfect waveform would have its range rate ambiguity beyond Mach 8 and its range ambiguity beyond 500 km. In this scenario, calculate PRF necessary to provide range rate ambiguity and rage ambiguity. Also comment upon the result.

[10 Marks]

Sol. (i) TX side:

TX power	P_{Tx}	30 W	45dBm
Antenna gain	G_{Tx}	12	12 dB
Losses	L_f	7	–7 dB
EIRP (Equivalent Isotropic Radiated Power)			50 dBm

RX side:

RX sensitivity, P_{min}	–102 dBm
Fading margin	12 dB
Maximum RX power	–90 dBm
Admissible path loss (difference EIRP and min RX power)	140 dB
Path loss at $d_{break} = 100m\left(\frac{\lambda}{4\pi d}\right)^2$	72 dB
Path loss beyond breakpoint αd^{-n}	68 dB

Pathloss exponent n = 35

Coverage distance, $d_{cov} = 100 \times 10^{68/10n}$

$$= 100 \times 10^{\frac{68}{10\times 9.5}}$$

$$= 8.76 \text{ km}$$

(ii) Doppler frequency, $f_d = \frac{2vf_0}{C}$

$$f_d = \frac{2v}{\lambda} = \frac{2 \times 330}{30 \times 10^{-2}} = 2.2 \text{ kHz}$$

$$R = \frac{C}{2 \times PRF} \Rightarrow PRF = \frac{C}{2 \times R}$$

$$PRF = \frac{3 \times 10^8}{2 \times 500 \times 10^3} = 300 \text{ pps}$$

8.(a) An electric field strength of 10 μV/m is required at a point which is 200 km from a half-wave dipole antenna in the horizontal plane i.e., $\theta = \frac{\pi}{2}$. The antenna is operating in air at 50 MHz. Calculate the current that must be fed to the antenna. Also find the average power radiated by the antenna. If a transmission line with characteristic impedance Z_0 = 75 Ω is connected to the antenna, determine the value of standing wave ratio.

[20 Marks]

Sol. For a halfwave dipole antenna,

$$|E| = \frac{\eta I_0 \cos\left(\frac{\pi}{2}\cos\theta\right)}{2\pi r \sin\theta} = 10\mu V/m$$

$$10 \times 10^{-6} = \frac{(120\pi) I_0 \cos\left(\frac{\pi}{2}\cos\frac{\pi}{2}\right)}{2\pi(200 \times 10^3)\sin\left(\frac{\pi}{2}\right)}$$

$$10 \times 10^{-6} = \frac{(120\pi) I_0}{2\pi(200 \times 10^3)}$$

$$I_0 = \frac{10^{-5} \times 2 \times 200 \times 10^3}{120} = 0.0333 \text{ A}$$

I_0 = 33.33 mA

$$P_{rad} = \frac{1}{2} I_0^2 R_{rad} = \frac{1}{2}(0.0333)^2(73\ \Omega)$$

P_{rad} = 0.041 W

Note: R_{rad} = 73Ω for half wave dipole antenna

For halfwave dipole antenna,

Z_{in} = R_{rad} + jX_{in} = (73 + j42.5)Ω

(If dipole is resonant, then you can use Z_{in} = 73Ω with X_{in} = 0

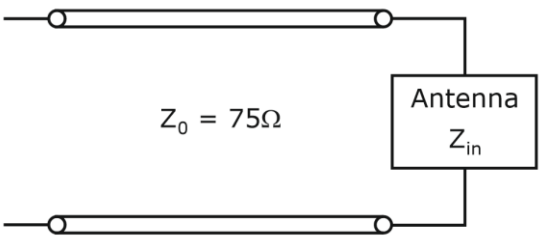

Reflection coefficient, $K_L = \frac{Z_{in} - Z_0}{Z_{in} + Z_0}$

$$K_L = \frac{-2 + j42.5}{148 + j42.5}$$

$\Rightarrow |K_L| = 0.276$

$$s = \frac{1 + |K_L|}{1 - |K_L|} = 1.763$$

8.(b) (i) What do you mean by Electro-static Discharge (ESD)? Why is ESD protection required? Suggest a protection method for ESD.

[10 Marks]

(ii) Design a combinational circuit to generate the 9's complement of a BCD digit, using only two NOT gates, two 2-Input OR gates and one 2-Input X-OR gate.

[10 Marks]

Sol. (i) Electro-static Discharge (ESD) refers to the sudden flow of electricity between two electrically charged objects caused by a difference in their electric potentials. It occurs when there is a rapid transfer of electrons from one object to another, resulting in a discharge of static electricity. ESD can cause damage or malfunction to electronic devices and components, particularly those that are sensitive to electrical charges.

ESD protection is required in various industries, such as electronics manufacturing, aerospace, automotive, and telecommunications, to prevent the detrimental effects of electro-static discharge. Here are a few reasons why ESD protection is necessary:

1. Device damage prevention: ESD can cause immediate or latent damage to electronic components, leading to device failure, reduced lifespan, or performance degradation.
2. Data loss prevention: ESD events can corrupt or erase stored data in electronic devices, potentially leading to data loss and operational issues.
3. Product reliability improvement: ESD protection measures ensure that electronic devices and components meet reliability standards, enhancing their overall performance and longevity.
4. Cost reduction: By implementing effective ESD protection strategies, companies can avoid costly repairs, replacements, or warranty claims caused by ESD-induced damage.

To protect against electro-static discharge, several methods can be employed. Here's one commonly used protection method:

1. ESD Control Measures: ESD control measures focus on creating an electrostatic discharge-safe environment and implementing proper handling procedures. Some key elements of ESD control include:

2.a. Grounding: Grounding personnel and workstations helps to equalize electrical potential and prevent static buildup. Conductive flooring, grounded wrist straps, and ESD-safe workbenches are commonly used.

3.b. ESD-safe Packaging: Using anti-static bags, containers, and trays to store and transport sensitive electronic components minimizes the risk of ESD damage during handling and shipping.

4.c. Humidity Control: Maintaining appropriate humidity levels in manufacturing areas can reduce static electricity buildup and discharge incidents.

5.d. ESD Training: Educating personnel about ESD risks, prevention techniques, and proper handling procedures is crucial for minimizing ESD-related damage.

6.e. ESD Testing: Conducting regular ESD testing and audits ensures that ESD control measures are effective and identifies areas for improvement.

It's important to note that the specific protection methods employed may vary depending on the industry, the nature of the electronic devices or components, and the desired level of ESD protection required.

(ii)

Input (BCD digit)				**Output (9's complement)**			
A	**B**	**C**	**D**	**P**	**Q**	**R**	**S**
0	0	0	0	1	0	0	1
0	0	0	1	1	0	0	0
0	0	1	0	0	1	1	1
0	0	1	1	0	1	1	0
0	1	0	0	0	1	0	1
0	1	0	1	0	1	0	0
0	1	1	1	0	0	1	0
1	0	0	0	0	0	0	1
1	0	0	1	0	0	0	0
1	0	1	0	Don't care(X)			
1	0	1	1				
. . .	. . .	. . .	. . .				
1	1	1	1				

$P = \Sigma m(0, 1) + \Sigma d(10, 11, 12, 13, 14, 15)$

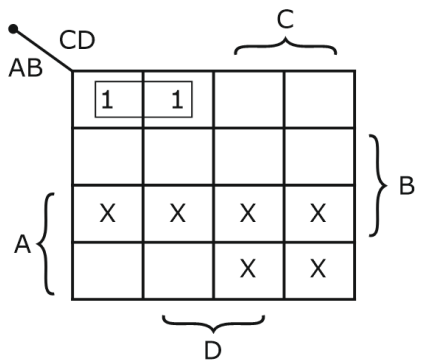

$P = \bar{A}\,\bar{B}\,\bar{C}$

$Q = \Sigma_m(2, 3, 4, 5) + \Sigma_d(10, 11, 12, 13, 14, 15)$

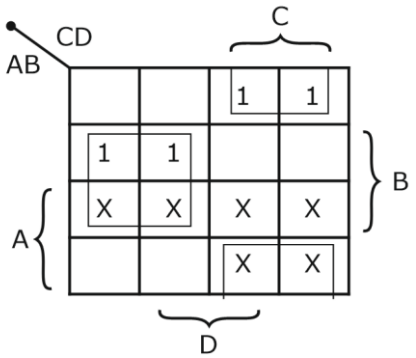

$Q = B\bar{C} + \bar{B}C = B \oplus C$

$R = \Sigma m\ (2, 3, 6, 7) + \Sigma d(10, 11, 12, 13, 14, 15)$

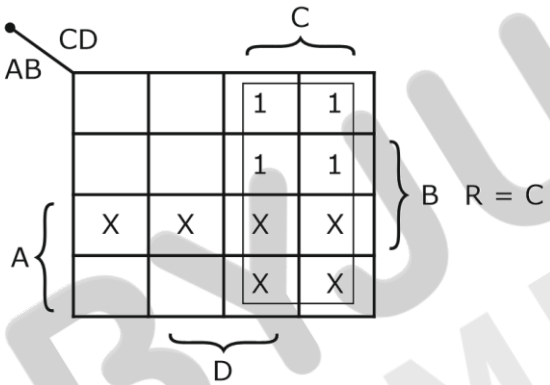

$S = \Sigma m(0, 2, 4, 6, 8) + \Sigma d(10, 11, 12, 13, 14, 15)$

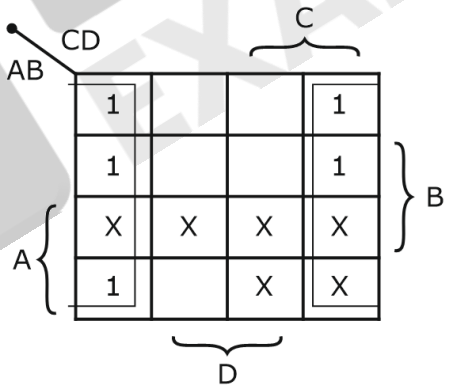

$S = \bar{D}$

So, $P = \bar{A}\,\bar{B}\,\bar{C} = \overline{A + B + C}$

$Q = B \oplus C$

$R = C$

$S = \bar{D}$

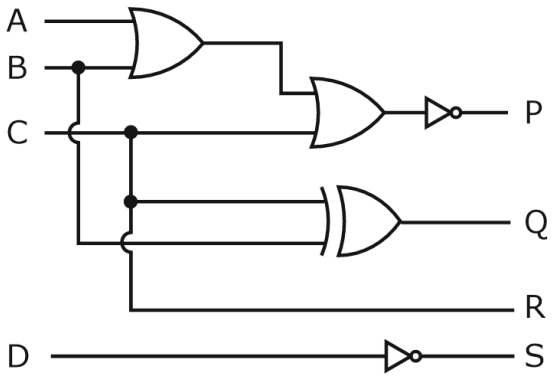

8.(c) (i) At a distance of 40,000 km from a point on the surface of Earth, a satellite radiates a power of 12 W from an antenna having a gain of 16 dB in the direction of the observer. Determine the flux density at the receiving point, and the power received by an antenna at this point with an effective area of 10 m^2. Express both flux density and power received in decibels as well.

[10 Marks]

(ii) Consider a satellite uplink has (C/No) of 82.2 dB and downlink has (C/No) of 79.8 dB. Assume bandwidth of the system as 1.2 MHz.

(I) Determine Numeric Value (NV) for each (C/No) value.

(II) Calculate (C/No) for the system (C/No)s.

(III) Determine (C/N) at 1.2 MHz BW.

[10 Marks]

Sol. (i) Given P_t = 12W, G_t = 16 dB, A_e = 10 m^2

R = 40,000 km

Flux density = $F = \frac{P_t G_t}{4\pi R^2}$

In dB:

$(F)_{dB} = 10 \log (P_t G_t) - 10 \log(4\pi R^2)$

$= 10 \log (P_t G_t) - 10 \log R^2 - 1 \log 4\pi$

$= 26.79 - 152 - 11$

$= -136.21$ dbW/m^2

Received power = F × A_e

$P_r = F\frac{dBW}{m^2} + A_e dBm^2$

$= -136.21 + 10$

$= -126.21$ dBW

In Absolute values:

$$F = \frac{12 \times 10^{1.6}}{4\pi(4 \times 10^7)^2} = 2.37 \times 10^{-14} \frac{W}{m^2}$$

$P_r = F \times A_e$

$= 2.37 \times 10^{-14} \times 10$

$= 2.37 \times 10^{-13}$ W

(ii) (I) First calculate the equivalent numerical value for each $\left(\frac{C}{N_0}\right)$ value

$$\left(\frac{C}{N_0}\right)_d = 10^{7.98} = 95.5 \times 10^6$$

$$\left(\frac{C}{N_0}\right)_u = 10^{8.22} = 166 \times 10^6$$

(II) $\left(\frac{C}{N_0}\right)_s^{-1} = \left(\frac{C}{N_0}\right)_d^{-1} + \left(\frac{C}{N_0}\right)_u^{-1}$

$$\left(\frac{C}{N_0}\right)_s^{-1} = \frac{1}{95.5\times10^6} + \left(\frac{1}{166\times10^6}\right) = 16.49 \times 10^{-9}$$

$$\left(\frac{C}{N_o}\right)_s = 60.62\times10^6$$

$$\left(\frac{C}{N_0}\right)_s = 10\log(60.62\times10^6) = 77.82 \text{ dB}$$

This is carrier to noise ratio in 1 Hz of bandwidth.

(III) Suppose we want to calculate in 1.2 MHz BW with $\left(\frac{C}{N_0}\right)_s$ of 77.82 dB

$$\left(\frac{C}{N}\right) = 77.82 - 10\log(1.2\times10^6)$$

= 77.82 – 60.79

= 17.03 dB

****

BYJU'S EXAM PREP | GATE

Outstanding performance by our students in GATE 2023

Congratulations to our toppers

13 Under AIR 10 | **62** Under AIR 50 | **107** Under AIR 100

RANK 01
SH GOWTHAM GUDIMELLA
Production & Industrial Engineering

RANK 03
KUSHAGRA
Mechanical Engineering

RANK 03
SARANSH GUPTA
Civil Engineering

RANK 04
VITTHAL AGRAWAL
Instrumentation Engineering

RANK 05
SARV VERMA
Electrical Engineering

RANK 05
DHRUV KATHROTIYA
Computer Science Engineering

RANK 05
HARSHIT
Production & Industrial Engineering

RANK 05
ARIJEET DE
Computer Science Engineering

RANK 06
BHARAT RAHEJA*
Electronics and Communication Engineering

RANK 08
PRASHANT LAVANIA
Electronics and Communication Engineering

RANK 09
ADITYA KALSHA
Electrical Engineering

Download The App Today!

GET IT ON Google Play | Download on the App Store