BYJU'S EXAM PREP

ESE Mains 2023

Electronics & Telecom. Engineering

Questions & Solutions

PAPER-1

Electronics and Telecommunication Engineering Paper 1 : Marks Distribution					
S. No.	Subjects	Difficulty Level 2023	2023 Marks	2022 Marks	2021 Marks
1	Basic Electronics Engineering	Moderate	69	87	94
2	Basic Electrical engineering	Moderate	86	30	32
3	Material Science	Moderate to Tough	77	70	54
4	Electronics Measurement and Instrumentation	Easy	52	80	72
5	Network Theory	Easy	82	140	126
6	Digital Circuits	Easy	22	43	40
	Analog Circuits	Moderate to Tough	92	30	62
Total			480	480	480

ELECTRONICS & TELECOMMUNICATION ENGINEERING

Paper-1

SECTION-'A'

1.(a) (i) An InGaAs photodiode operating at 1.3 μm is limited by background radiation giving $I_B = 10^{-7}$ A. The responsibility of the diode is 0.74 A/W at 1.3 μm. Find the minimum detectable power of this photodiode if the bandwidth of the device is 10 MHz and load resistance is $R_L = 10^7\ \Omega$.

[6 Marks]

(ii) An nMOS transistor has a threshold voltage (V_t) of 0.4 V and a supply voltage V_{DD} = 1.2V. A circuit designer is evaluating a proposal to reduce V_t by 100 mV to obtain faster transistor. By what factor would the subthreshold leakage current increase at room temperature at $V_{gs} = 0$?

Assume n = 1.4.

[6 Marks]

Sol. (i) To find the minimum detectable power, we need to consider the noise sources and find corresponding noise power.

The dominant noise source in this case is the shot noise generated by the background radiation short noise current is given by,

$$I_{shot} = \sqrt{2qI_B(BW)}$$

$$I_{shot} = \sqrt{2 \times 1.6 \times 10^{-19} \times 10^{-7} \times 10 \times 10^6}$$

$$I_{shot} = 0.56 \times 10^{-9} A$$

Minimum detectable power

$$P_{shot} = I_{shot} \times R = 0.56 \times 10^{-9} \times 0.74$$

$$P_{shot} = 0.41 \times 10^{-9}\ W$$

(ii) Subthreshold current

$$I_{sub} \propto e^{\frac{(V_{GS} - V_t)}{nV_T}}$$

Here, V_t = threshold voltage

$V_T = \frac{kT}{q}$ at room temp (27°C)

n = process parameter $\quad V_T$ = 26 mV

$$I_{sub_1} = k\ e^{\frac{(V_{GS} - V_t)}{nV_T}}$$

At $V_{GS} = 0$ $\quad V_{t_1} = 0.4\,V$

$$I_{sub_1} = k\, e^{\frac{-V_{t_1}}{nV_T}} \quad \ldots (1)$$

At $V_t = V_{t_2}$

$$I_{sub_2} = k\, e^{\frac{-V_{t_2}}{\eta V_T}} \quad \ldots (2)$$

On dividing (2) & (1), we get,

$$\frac{I_{Sub_2}}{I_{Sub_1}} = e^{\left(V_{t_1} - V_{t_2}\right)/nV_T}$$

$$\frac{I_{SUb_2}}{I_{SUb_1}} = e^{100/1.4 \times 26}$$

$\cong$ 15.6 Ans.

1.(b) Design a two-sided limiting circuit using a resistor, two diodes and two power supplies to feed a 1 kΩ load with nominal limiting levels of ±3V. Use voltage drop of 0.7V for each diode when conducting. In the non-limiting region, the circuit voltage gain should be at least 0.95 V/V.

[12 Marks]

Sol.

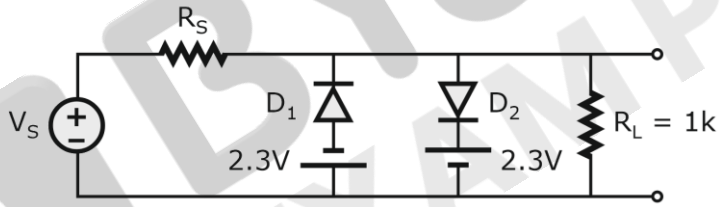

D_1 and D_2 are OFF, [$-3.157 \le V_i \le 3.157$V]

$$\frac{V_0}{V_s} = \frac{R_L}{R_s + R_L} = 0.95$$

$$\frac{1}{R_s/R_L + 1} = 0.95$$

$$R_s / R_L = 0.0526$$

$$R_s = 0.0526 \times R_L = 0.0526 \times 1000 = 52.63\,\Omega$$

for $V_0 = -3$ volt $\quad V_0 = \frac{R_L}{R_s + R_L} V_i = 0.95\, V_i$

$$V_i = \frac{-3}{0.95} = -3.157 \text{ Volt}$$

For $V_0 = 3$ volt $\quad V_i = \dfrac{3}{0.95} = 3.157\ V_0$

V_i	D_1	D_2	V_0
$V_i < -3.15\ 7V$	ON	OFF	$-3V$
$-3.157V \le V_i \le 3.157V$	OFF	OFF	$\dfrac{R_L}{R_s + R_L} V_i = 0.95V_i$
$V_i > 3.157V$	OFF	ON	$3V$

$V_i < -3.157$ V $\quad D_1$ ON D_2 OFF

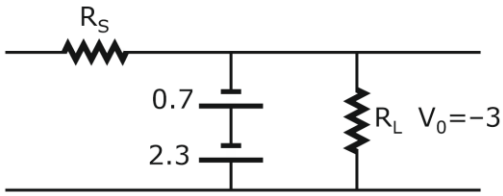

When, $V_i > 3.157$ V

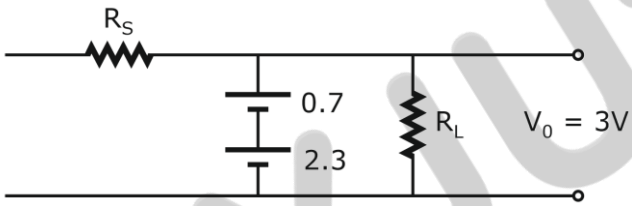

1.(c) Find the node voltages V_a and V_b for the circuit shown in the figure using node voltage analysis. Also, find the current through 5Ω resistor:

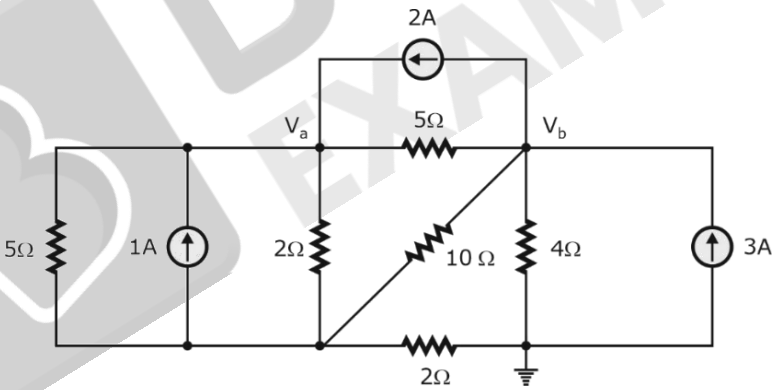

[12 Marks]

Sol.

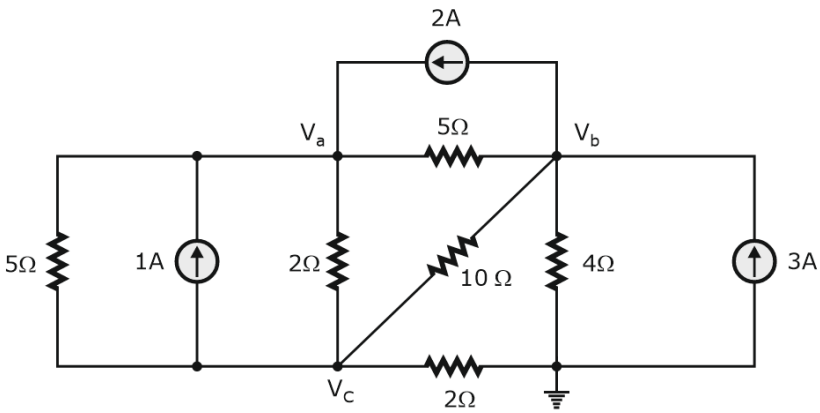

Nodal equation at 'V_a' node

$$\frac{V_a - V_c}{5} - 1 + \frac{V_a - V_c}{2} - 2 + \frac{V_a - V_b}{5} = 0$$

$$V_a\left[\frac{1}{5} + \frac{1}{2} + \frac{1}{5}\right] - \frac{V_b}{5} - V_C\left[\frac{1}{5} + \frac{1}{2}\right] = 3$$

$0.9V_a - 0.2V_b - 0.7\ V_C = 3$ ... (1)

Nodal equation at 'V_b' node

$$2 + \frac{V_b - V_a}{5} + \frac{V_b - V_c}{10} + \frac{V_b}{4} - 3 = 0$$

$$-V_a\left[\frac{1}{5}\right] + V_b\left[\frac{1}{5} + \frac{1}{10} + \frac{1}{4}\right] - \frac{V_c}{10} = 1$$

$-0.2\ V_a + 0.55\ V_b - 0.1V_c = 1$ ... (2)

Nodal equation at 'V_c' node

$$1 + \frac{V_c - V_a}{5} + \frac{V_c - V_a}{2} + \frac{V_c - V_b}{10} + \frac{V_c}{2} = 0$$

$$V_c\left[\frac{1}{5} + \frac{1}{2} + \frac{1}{10} + \frac{1}{2}\right] - V_a\left[\frac{1}{5} + \frac{1}{2}\right] - V_b\frac{1}{10} = -1$$

$1.3\ V_C - 0.7\ V_a - 0.1V_b = -1$ ... (3)

Solving above 3 equations, we get

$V_a = 7.15$ Volts;

$V_b = 5.05$ volts;

$V_c = 3.47$ Volts

Now, the current through 5Ω resistor across 2A source is,

$$\frac{V_a - V_b}{5} = \frac{7.15 - 5.05}{5} = 0.42\ A$$

And the current through 5Ω resistor across 1A source is,

$$\frac{V_a - V_c}{5} = \frac{7.15 - 3.47}{5} = 0.736\ A$$

1.(d) Find the Thevenin equivalent circuit for the network shown below. Also, find the current through the load resistor of 10 ohms, if connected across the terminal a-b of the Thevenin equivalent circuit: **[12 Marks]**

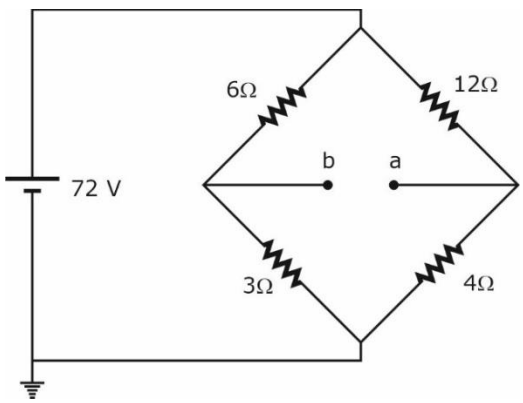

Sol. Thevenin's equivalent circuit

I. V_{th} Calculation:

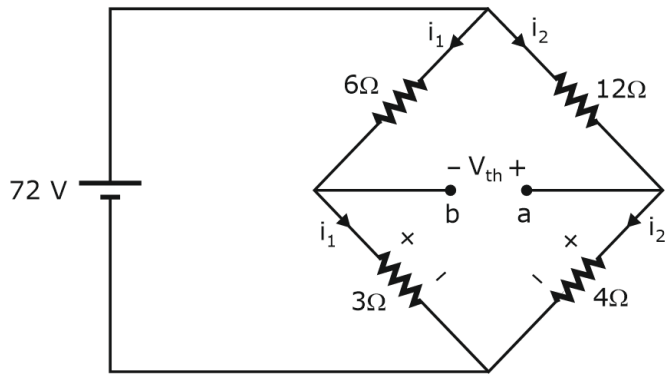

$$i_1 = \frac{72}{9} = 8A$$

$$i_2 = \frac{72}{16} = 4.5\ A$$

By KVL

$+V_{th}\ (V_{ab}) - i_2 \times 4 + i_1 \times 3 = 0$

$V_{th} - 4.5 \times 4 + 8 \times 3 = 0$

$V_{th} = -6$ Volts

II. R_{th} Calculation:

Replace 72V source by short circuit.

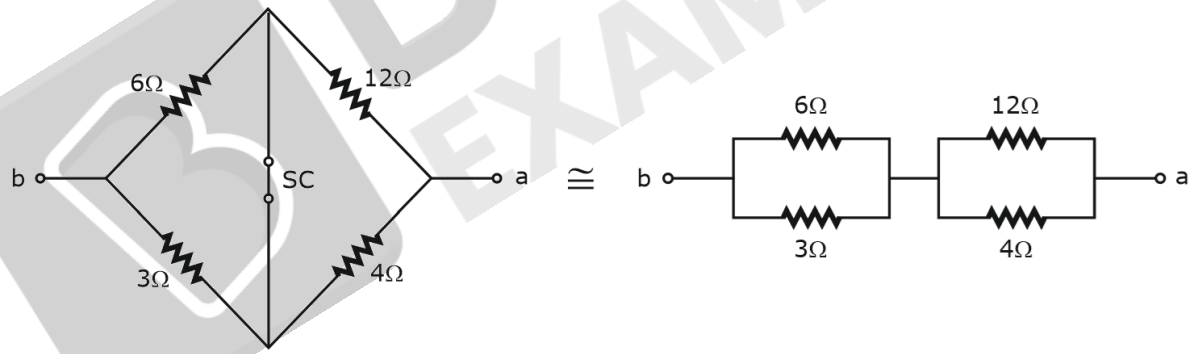

$R_{ab} = (6\ ||\ 3) + (12\ ||\ 4)$

$$R_{ab} = \frac{18}{9} + \frac{48}{16}$$

$$R_{th} = R_{ab} = 5\Omega$$

Thevenin's equivalent circuit

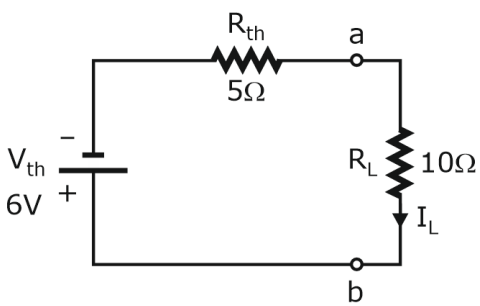

The current through 10Ω load resistor is

$$I_L = -\frac{6}{5+10} = -0.4 \text{ Amp's}$$

1.(e) The following figure shows three different crystallographic planes for a unit cell of a hypothetical material. For each plane, the circles represent only those atoms contained within the unit cell, where circles are reduced from their actual diameter/size. Identify the unit cell and the crystal system it belongs to:

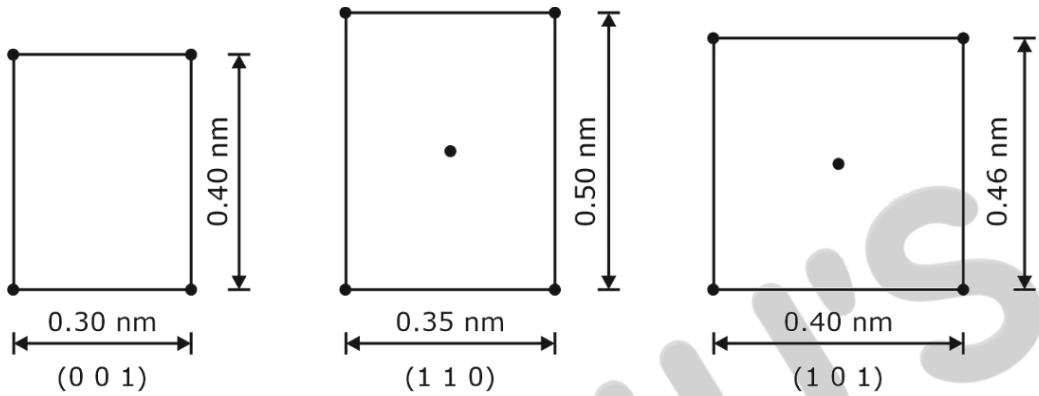

[12 Marks]

Sol.

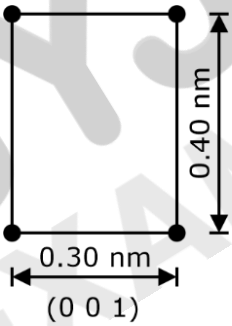

From this plane,

a = 0.3 nm

b = 0.4 nm

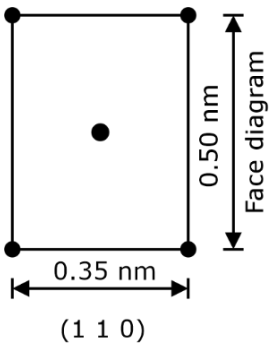

From this plane,

c = 0.35 nm

$\sqrt{2} \times c = 0.5$

Atom is located at face center and 8 atoms located at 8 corners.

(1 1 0)

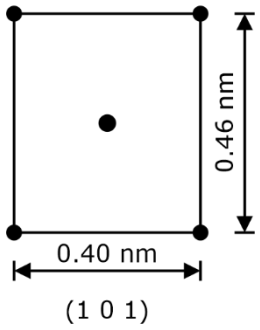

From this, b = 0.4

$\sqrt{2} \times b = 0.46$

From the above data, the crystal system belongs to face centered orthorhombic structure.

2.(a) **(i)** Why are boron and phosphorus almost universally employed for p-type and n-type impurities in silicon?

[10 Marks]

(ii) The diffusion coefficient for copper in aluminum at 500°C and 600°C are 4.8×10^{-14} m^2/s and 5.3×10^{-13} m^2/s, respectively. Determine the approximate time at 500°C the will produce the same diffusion result as a 10-hour heat treatment at 600°C.

[5 Marks]

(iii) Find the driving-point impedance to the right of the input terminals of the given circuit. Comment on the result:

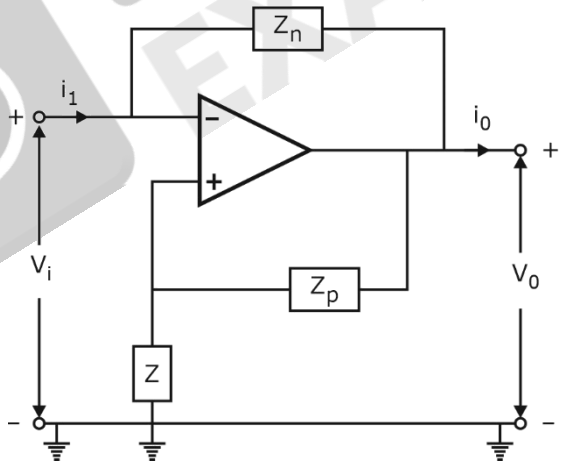

[5 Marks]

Sol. **(i)** Boron and phosphorus are commonly used as p-type and n-type impurities, respectively, in silicon for various reasons:

1. Atomic Structure:

   Boron has three valence electrons, while silicon has four. When boron is introduced as an impurity in silicon, it creates a "hole" or a deficiency of one electron, resulting in p-type doping.

Phosphorus has five valence electrons. When it is introduced into silicon, it provides an extra electron, creating an excess or "free" electron, leading to n-type doping.

The atomic structure of boron and phosphorus allows them to readily create the desired majority carriers for p-type or n-type conductivity in silicon.

2. Diffusion Characteristics:

   Boron and phosphorus exhibit different diffusion characteristics in silicon. Boron diffuses at a slower rate, allowing for precise control over the depth of p-type doping regions. Phosphorus, on the other hand, diffuses more readily, enabling the creation of well-defined and shallow n-type doping profiles.

3. Electrical Properties:

   Boron and phosphorus have the desired electrical properties for p-type and n-type doping. Boron has a lower ionization energy, making it efficient in creating holes as the majority carriers in p-type silicon. Phosphorus has a higher ionization energy, facilitating the generation of free electrons as the majority carriers in n-type silicon.

4. Abundance and Compatibility:

   Boron and phosphorus are relatively abundant elements, making them cost-effective for large-scale semiconductor manufacturing. They are compatible with the silicon crystal lattice, meaning that they can be easily incorporated into the silicon structure without causing significant defects or lattice strain.

Overall, the selection of boron and phosphorus as p-type and n-type impurities in silicon is primarily driven by their atomic structure, abundance, compatibility, desired electrical properties, and diffusion characteristics, making them widely used and suitable for various semiconductor device applications.

(ii) Diffusion coefficient for copper in Aluminum

At 500°C, $D_{C_{500}} = 4.8 \times 10^{-14}\ m^2/s$

Diffusion coefficient for copper in Aluminum

At 600°C, $D_{C_{600}} = 5.3 \times 10^{-13}\ m^2/s$

Diffusion Law, $D_c \times t$ = constant

$$D_{C_{500}} \times t_{500} = D_{C_{600}} \times t_{600}$$

$$t_{500} = \frac{D_{C_{600}} \times t_{600}}{D_{C_{500}}} = \frac{5.3 \times 10^{-13} \times 10}{4.8 \times 10^{-14}} = 110.416\ h$$

(iii)

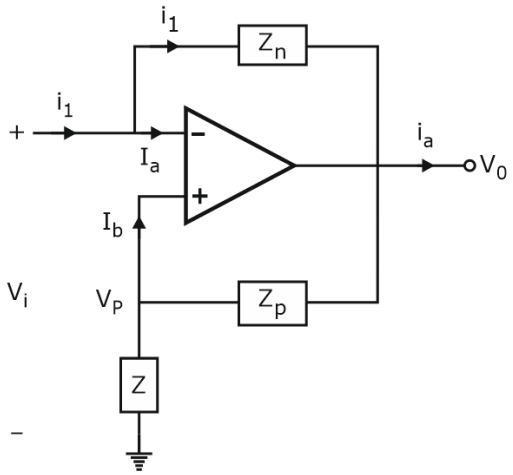

$$V_p = \frac{Z}{Z+Z_p} V_0 \quad ...(1)$$

$V_P = V_n$ ....(2) Virtual short concept

$V_n = V_i$ .... (3) Driving point impedance

$$Z_{11} = \frac{V_1}{I_1} \quad ... \quad (4)$$

From (1) & (3),

$$\frac{Z}{Z+Z_p} V_0 = V_i \Rightarrow V_0 = \left(1+\frac{Z_p}{Z}\right) V_i$$

$I_a = I_b = 0 \quad \because R_i = \infty$

$$\therefore \; i_1 = \frac{V_i - V_0}{Z_n} = \frac{1}{Z_n}\left[V_i - \left(1+\frac{Z_p}{Z}\right)V_i\right]$$

$$i_1 = \frac{-1}{Z_n} Z_p/Z \; V_i$$

$$\boxed{\frac{V_i}{i_1} = -\left[\frac{Z_n Z}{Z_P}\right]}$$

Comments: There is power dissipation across the Resistance & Power generation across negative Resistance

$\therefore$ if $Z_n = Z_p$ & $Z = R$

$$\boxed{Z_{11} = \frac{V_i}{i_1} = -R}$$

2.(b) (i) Derive the Fermi level position in an intrinsic semiconductor in terms of E_c, E_v and effective messes of electron (m_n^*) and hole (m_p^*). Hence, calculate the position of the intrinsic Fermi level with respect to the centre of the band gap in silicon at T = 300K. Given that $m_n^* = 1.08m_0$ and $m_p^* = 0.56m_0$. Here, m_0 is rest mass of the electron.

[10 Marks]

(ii) Calculate the currents and voltages in the circuit given below. Also, calculate the power dissipated in the transistor. The transistor parameters are β = 100, $V_{BE(ON)}$ = 0.7V, $V_{CE(sat)}$ = 0.2 V:

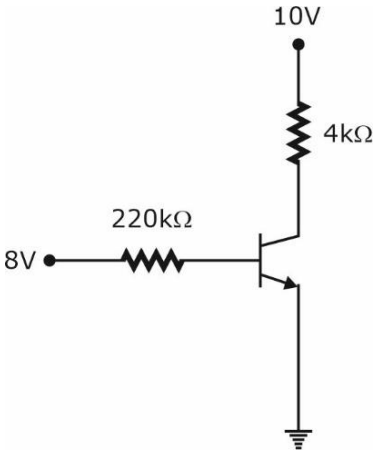

[10 Marks]

Sol. **(i)** Concentration of electron

$$n = N_c\, e^{-(E_C - E_F)/kT} \quad \ldots (1)$$

Concentration of holes

$$P = N_v\, e^{-(E_F - E_V)/kT} \quad \ldots (2)$$

For intrinsic semiconductor

$$n = p = n_i \quad \ldots (3)$$

On dividing equation (1) & (2), we get,

$$\frac{n}{P} = \frac{N_c}{N_v}\, e^{\{-(E_C - E_F) + (E_F - E_V)\}/kT}$$

$$\frac{N_C}{N_V} = e^{(E_C + E_V - 2E_F)/kT} \quad \because n = p = n_i$$

By taking log,

$$\ell n \frac{N_C}{N_V} = \frac{E_C + E_V - 2E_F}{kT}$$

$$\boxed{E_F = \frac{E_C + E_V}{2} - \frac{kT}{2}\, \ell n^{N_C/N_V}} \quad \ldots (4)$$

Effective or standard density of state of conduction band,

$$N_C = 2\left[\frac{2\pi\, m_n^* kT}{h^2}\right]^{3/2} \quad \ldots (5)$$

Effective or standard density of state of valence band,

$$N_V = 2\left[\frac{2\pi\, m_p^* kT}{h^2}\right]^{3/2} \quad \ldots (6)$$

$$\therefore \quad \frac{N_C}{N_V} = \left[\frac{m_n^*}{m_p^*}\right]^{3/2} \qquad (7)$$

So, from equation (4) and (7),

$$E_F = \frac{E_C + E_V}{2} - \frac{kT}{2}\ell n\left[\frac{m_n^*}{m_p^*}\right]^{3/2} \qquad (8)$$

So, position of intrinsic fermi level,

$m_n^* = 1.08\ m_0 \quad m_p^* = 0.56\ m_0$

Put in equation (8)

$$E_F = \frac{E_C + E_V}{2} - \frac{0.026}{2}\ell n\left[\frac{1.08\ m_0}{0.56\ m_0}\right]^{3/2}$$

$$E_F = \frac{E_C + E_V}{2} - 0.0128$$

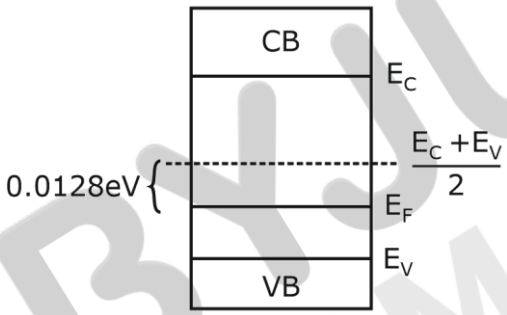

(ii)

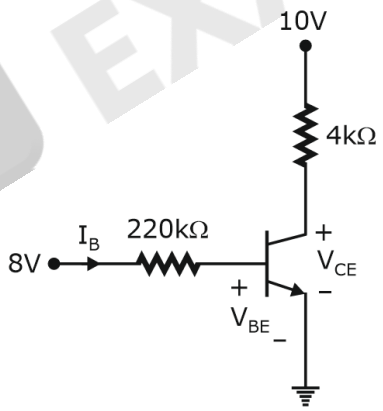

Given β = 100 $\quad V_{BE\,(on)} = 0.7\,V \quad V_{CE\,sat} = 0.2\,V$

Let BJT is in active Region,

$$I_B = \frac{V_{BB} - V_{BE}}{R_B} \qquad \ldots (1)$$

$$I_B = \frac{8 - 0.7}{220} = 0.0332\ mA \qquad \ldots (2)$$

$$I_C = \beta\, I_B = 3.32\ mA \qquad \ldots (3)$$

$V_{CE} = V_{CC} - I_C R_C$ ... (4)

$V_{CE} = 10 - 3.32 \times 4 = -3.27 < V_{CE\ sat}$ ... (5)

∴ Our assumption is wrong and BJT is in saturation.

$$I_{c\ sat} = \frac{V_{CC} - V_{CE\ sat}}{R_C} = \frac{10 - 0.2}{4} = 2.45 \text{ mA} \quad \text{... (6)}$$

$I_B = 0.0332$ mA from (2)

Power dissipation across transistor will be,

$P_T = V_{CE} I_C = 0.2 \times 2.45$

$P_T = 0.49$ mW

2.(c) (i) Predict the crystal structure and compute the theoretical density for FeO.

Given—

Ionic radius of Fe^{++} = 0.077 nm

Ionic radius of O^{--} = 0.140 nm

Atomic weight of Fe = 55 845 g/mole

Atomic weight of O = 16 g/mole

Avogadro's number = 6.022×10^{23} /mole

[10 Marks]

(ii) How are ceramic products fabricated? Explain the role of powder pressing and sintering in the fabrication of ceramic products.

[10 Marks]

Sol. (i) From the given data, we can say that FeO structure is a Rock salt structure

With Fe^{2+} ion at corners & face centres and O^{2+} ions at edges and body centre located

Effective number of atoms, $n_{Fe^{2+}} = 4$

$n_{O^{2-}} = 4$

$$\text{Theoretical density} = \frac{\left(n_{Fe^{2+}} \times AW_{Fe^{2+}}\right) + \left(n_{O^{2-}} \times AW_{O^{2-}}\right)}{AN \times V_{vc}}$$

Volume of unit cell = $a^3 = 8(R_{Fe} + R_O)^3 = 8(0.77 + 0.140)^3 \times 10^{-21}$ cm^3 = 0.1002×10^{-21} cm^3

$$S_{FeO} = \frac{4 \times 55.34 + 4 \times 16}{\left(6.02 \times 10^{23}\right) \times 0.1002 \times 10^{-21}} = \frac{407}{0.603 \times 10^2} = 6.7 \text{ g/cm}^3$$

(ii) FABRICATION AND PROCESSING OF CERAMICS:

Ceramics melt at higher temperatures, and they show brittle behavior under tension. Hence, the conventional casting, melting and thermo-mechanical treatment routes are not good enough to process the polycrystalline ceramics.

Processing ceramics involves several steps that include processing of powder, Forming, Sintering and Finishing.

Processing of Powder: Ceramic powder processing comprises of powder production by grinding, followed by production of green product, which is then fabricated to produce the final product. A powder is a stock of very fine particles. Production of powder means getting it ready for fabricating by crushing, grinding, separating impurities, blending different powders, drying to form soft agglomerates. Powders are chemically treated separate different phases and compound to achieve requisite pureness. Finer and homogeneous particles are preferred.

Forming Process:

It has several methods such as slip casting, injection molding, tape casting, and extrusion are then used to amend processed powders into a desired shape to form green ceramic.

Tape Casting:

Tape casting is also called the doctor blade process. By tape casting thin ceramic tapes are fabricated. In this process slurries containing ceramic particles, solvent plasticizers, and binders are made to flow under a blade and on to a plastic substrate. The shear thinning slurry spreads below the blade. The tape is then desiccated using clean warm air. Latterly the tape is subjected to binder burnout and sintering operations. Tape casting is used for making commercially important electronic packages. The thickness of tape normally varies between 0.1 and 2 mm.

Slip casting:

It uses aqueous slurry, also known as slip, of ceramic power. The aqueous slurry is fed into a mold of Plaster of Paris. As the water from slurry beings flows out by capillary action, a thick mass builds along the mold wall. When adequate product thickness is built, the remaining slurry is drained out. It is also possible to continue to pour more slurry in to form a solid piece casting.

Injection Molding:

Injection molding of ceramics is similar to that of polymers. Ceramic powder is blinded with a plasticizer, a thermoplastic polymer, and additives. Then the mixture is injected into a die with use of an extruder. The polymer is then burnt off and the remaining ceramic shape is sintered at suitable high temperatures.

Sintering Process:

The green ceramic is then strengthened using a high temperature process known as sintering (firing). Sintering has the utmost effect on the properties and hence subjected to stringent control. The motivating force for sintering is the reduction in total surface area on surface energy of the powder particles.

The major sintering variables are temperature, time and the atmosphere of the furnace. The temperature of sintering is in the range of 75.90% of the melting point.

3.(a) (i) Determine the source current $i_S(t)$ for the circuit shown in the figure using phasor analysis method:

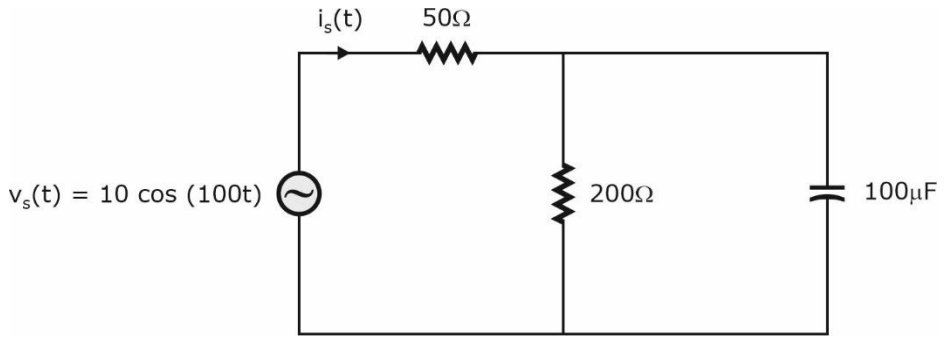

[10 Marks]

(ii) A customer's plant has two parallel loads connected to the power utility's distribution lines. The first load consists of 50 kW of heating and is resistive. The second load is a set of motors that operate at 0-86 lagging power factor. The motors' load is 100 kVA. Power is supplied to the plant at 10000 volts r.m.s. Determine the total current flowing from the utility's lines into the plant and the plant's overall power factor.

[10 Marks]

Sol. (i)

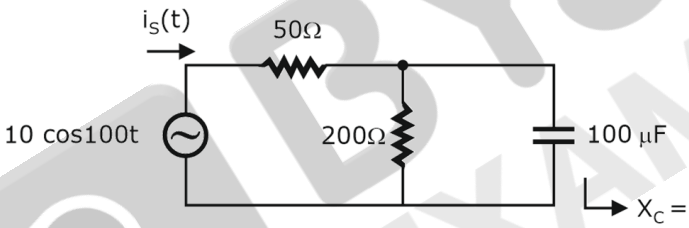

$$X_C = \frac{-j}{\omega C} = \frac{-j}{100 \times 100 \times 10^{-1}} = -j100$$

200Ω and 100μF are in parallel,

$$\text{So } Z = \frac{200 \times (-j100)}{200 - j100} = \frac{-200j}{2 - j}$$

$$= 40 - j80\ \Omega$$

Equivalent impedance seen by source,

$Z_{eq} = 50 + Z = 50 + 40 - j80 = 90 - j80\Omega$

$$\text{Current } i_s(t) = \frac{V_s(t)}{z_{eq}} = \frac{10 \cos 100t}{90 - j80}$$

$$= \frac{10\angle 0°}{120.42\angle -41.63} = 0.083\ \angle 41.63°$$

$i_s(t) = 0.083 \cos(100t + 41.63)$

$$e_s(\text{rms}) = \frac{i_s(\text{max})}{\sqrt{2}} = \frac{0.083}{\sqrt{2}} = 0.058 \text{ Amp}$$

(ii)

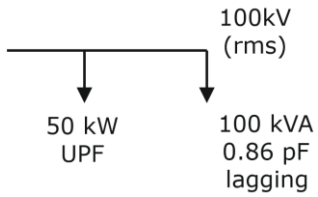

Load – 1 ⇒ P =50 kW, Q = 0 kVAR

Load – 2 ⇒ P = S cos ϕ = 100 × 0.86 = 86 kW

and $Q = 5\sin\phi = 100 \times \sin\left[\cos^{-1} 0.86\right] = 100 \times 0.51 = 51$ kVAR

Total power

$S_T = P_T + jQ_T = (50 + 86) + j(51) = (136 + j51)$ kVA

Total power factor ⇒ $\cos\theta = \frac{P_T}{S_T} = \frac{136}{\sqrt{136^2 + 51^2}} = 0.936$ lagging

We know $|S| = |V_S|\ |I_S|$

145.24 kVA = 10 kV . $|I_S|$ rms

Line current = $|I_S|_{rms}$ = 14.52 Amp

$\vec{I}_s = 14.52 \angle \cos^{-1}(0.936) = 14.52\angle 20.609°$ Amp

3.(b) (i) Draw the power flow diagrams of a DC generator and a DC motor.

[10 Marks]

(ii) A 250 V shunt motor on no load runs at 1000 r.p.m. and takes 5 A. The total armature and shunt field resistances are respectively 0.2Ω and 250 Ω. Calculate the speed when loaded and taking a current of 50 A, if the armature reaction weakens the field by 3%.

[10 Marks]

Sol. (i)

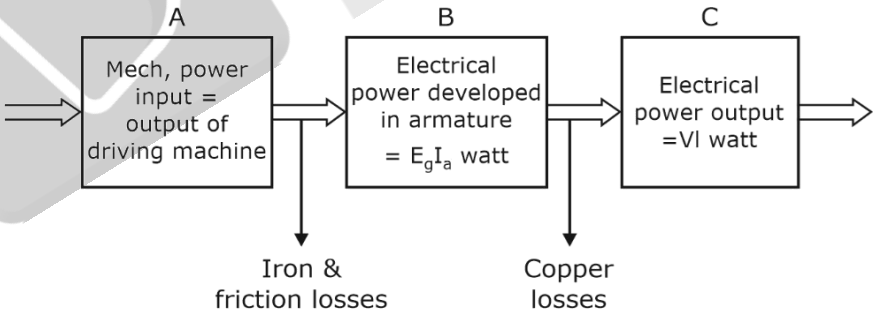

Generator

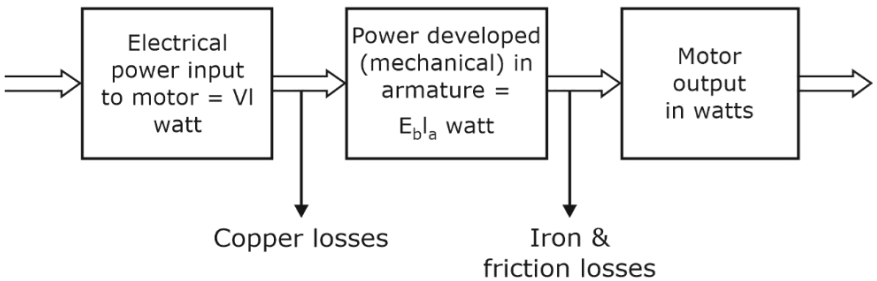

Motor

(ii) D.C Shunt Motor

No load

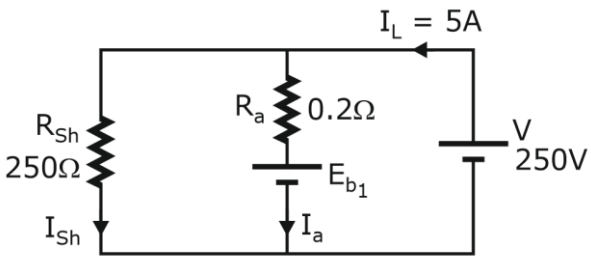

$$I_{Sh} = \frac{V}{R_{Sh}} = 1\,A;\ \ N_1 = 100 \text{ rpm}$$

$I_a = I_L - I_{sh} = 5 - 1 = 4A.$

$$\therefore E_{b_1} = 250 - 4 \times 0.2$$

$$\boxed{E_{b_1} = 249.2 \text{ Volts}}$$

Case (ii): During load.

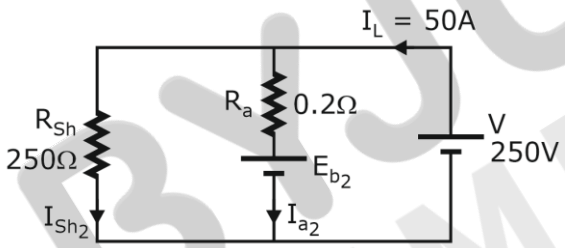

$$I_{Sh_2} = \frac{250}{250} = 1A$$

$$I_{a_2} = 50 - 1 = 49A$$

$$E_{b_2} = 250 - 49 \times 0.2 = 240.2 \text{ Volts}$$

We know, $N \propto \frac{E_b}{\phi}$

$$\therefore \frac{N_2}{N_1} = \frac{E_{b_2}}{E_{b_1}} \times \frac{\phi_1}{\phi_2}$$

$$\frac{N_2}{1000} = \frac{240.2}{249.2} \times \frac{\phi_1}{0.97}\phi_1$$

$\left[\text{Here } \phi_2 = 0.97\ \phi_1 \quad \because 3\% \text{ reduced}\right]$

$$\boxed{N_2 = 993.69 \text{ rpm}}$$

3.(c) (i) Drive an expression for electrical conductivity of an intrinsic semiconductor and compute the room temperature intrinsic carrier concentration for gallium arsenide. [Given, the room temperature electrical conductivity for gallium arsenide is $3 \times 10^{-7}(\Omega m^{-1})$. The electron and hole mobilities are $0.80 m^2/V\text{-}s$ and $0.04\ m^2/V\text{-}s$, respectively]

[10 Marks]

(ii) Discuss Matthiessen's rule and explain the influences of the factors affecting resistivity of metals.

[10 Marks]

Sol. (i)

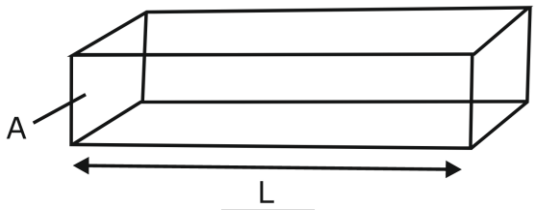

A = Area of cross section

L = Length of semiconductor bar

$\because J \propto E$

$J = \sigma E$ ... (1)

σ = conductivity of bar.

$J = \frac{I}{A} = \frac{Q}{tA}$ .... (2)

t = time taking by charge particle to cover length L

$\therefore\ t = \frac{L}{v_d}$ .... (3)

v_d = drift velocity of electron

$v_d = \propto E \quad v_d = \mu_n E$ ... (4)

μ_n = mobility of electron.

E = electric field intensity.

Put (3) in (2)

$J = \frac{Q v_d}{L A}$ ... (5)

We know, $\frac{Q}{L A} = \rho \rightarrow$ Volume charge density ... (6)

$\rho = nq$..... ... (7)

$n \rightarrow$ concentration of electron (cm^{-3})

or

$\rho = pq$ .... (8)

p_O = concentration of hole.

$\therefore J = \rho v_d$..... ... (9)

Put (4) & (7) in (9)

$J_n = nq\ \mu_n E$..... ... (10)

Similarly current density due to hole

$J_p = pq\ \mu_p E$ ... (11)

Since,

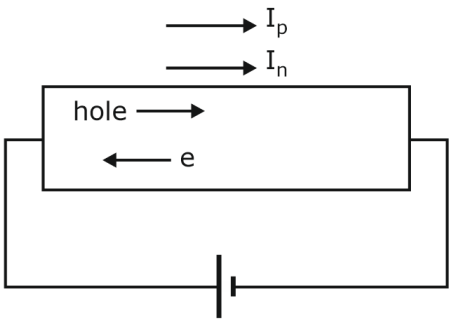

$\therefore J = J_p + J_n = nq\,\mu_n E + pq\,\mu_n E$ (12)

From (1) & (12)

$\sigma = nq\,\mu_n + pq\,\mu_p$

for Intrinsic semiconductor $n = p = n_i$

$\therefore \sigma = n_i\, q(\mu_n + \mu_p)$

Note $\mu_n \gg \mu_p$

For Gallium Arsenide,

$\sigma = 3 \times 10^{-7}\ (\Omega m)^{-1}$

$\mu_n = 0.80\ m^2/V\text{-}sec$

$\mu_p = 0.04\ m^2/V\text{-}sec$

$$n_i = \frac{\sigma}{q\left[\mu_n + \mu_p\right]} = \frac{3 \times 10^{-7}}{1.6 \times 10^{19}\,(0.8 + 0.04)}$$

$$n_i = 2.23 \times 10^{12/m^3}$$

(ii) Matthiessen's Rule

Based on Matthiessen's Rule the electrical resistivity increases with increasing crystallographic imperfection. The crystallographic imperfections are generated by Increasing temperature, Adding alloying elements & Cold working

$$\int_{Total} = \int_{Temp} + \int_{alloy} + \int_{coldworking}$$

Types of Resistivity:-

1. Residual Resistivity: It is the incremented resistivity due to alloying and cold working.

2.Temperature Resistivity: It is the incremented Resistivity due to temperature

Factors effecting Resistivity of a conductor/metal:-

1. Crystallographic imperfection

* Resistivity of a conductor increases with increasing no of defects because collision of electrons.

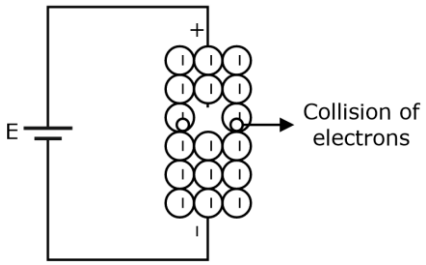

2. Temperature

The Resistivity of metal increases with increasing temperature because with increasing temperature of metal atomic vibrations or Lattice vibrations are induced. And due to that scattering of electrons

1. At low temperature < 0°C, Resistivity increases exponentially with increases temperature
2. At high temperature > 0°C the Resistivity increases linearly with increasing temperature.

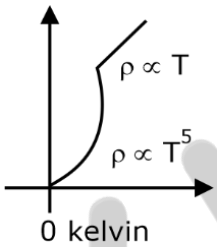

$$RT_2 = RT_1\left[1+\alpha\left(T_2 - T_1\right)\right]$$

$$\int T_2 = \int T_1\left[1+\alpha\left(T_2 - T_1\right)\right]$$

$\alpha =$ coefficient of thermal expansions

3. Solid Solution:

Homogenous mixture of two or more metals

Brass (1kg) = Cu + Zn

(90%) (10%)

Solvant → High Concentration

Solute → Foreign atom

It is a homogeneous mixture of solvent & solute. The electrical resistivity of an alloy increases with increasing alloy content because of localized collision of electrons at impurity atom position. This is Because of Difference in size of solvent, Difference in valence electrons of host material atom & impurity atom and Difference in Fermi-energy's of solvent & solution

4. Cold working or Hard drawn or plastic deformation

Cold working is one of the strengthening mechanisms of a material. In this process material is deformed drastically by applying mechanical forces. And due to the material generates large no of dislocation or defects and due to the resistivity (ρ) of material increases.

4.(a) (i) The recombination process in an LED at 300 K is dominated by bulk radiative, SRH and auger process. The mean lifetimes of carrier due to radiative, SRH and auger process are 5 ns, 10 ns and 25 ns, respectively. Estimate the quantum efficiency of the LED in absence of surface recombination. What is the bandwidth of this LED?

[10 Marks]

(ii) Find the maximum allowed voltage of V_S in the given adjustable output voltage regulator circuit. The Zener diode specifications limit the maximum current through Zener diode to I_{Zmax}:

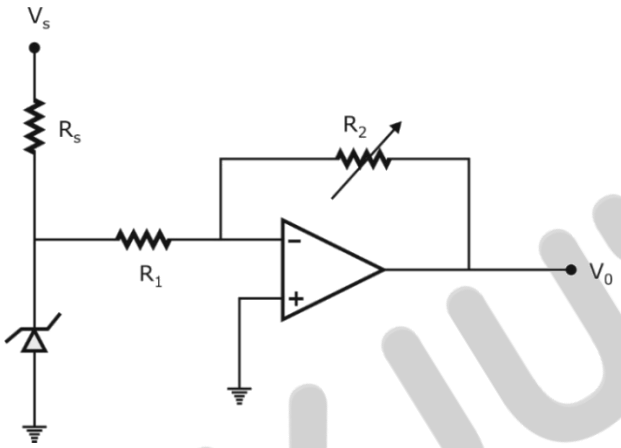

[10 Marks]

Sol. (i) mean lifetimes of carriers

$\tau_r = 5$ n sec

$\tau_{SRH} = 10$ n sec

$\tau_a = 25$ n sec

Net mean lifetime of carriers is given by,

$$\frac{1}{\tau} = \frac{1}{\tau_r} + \frac{1}{\tau_{SRH}} + \frac{1}{\tau_a}$$

$$\frac{1}{\tau} = \frac{1}{5} + \frac{1}{10} + \frac{1}{25}$$

$$\frac{1}{\tau} = \frac{10+5+2}{50} = \frac{17}{50}$$

$$\tau = \frac{50}{17} \text{ n sec}$$

Quantum efficiency $\eta_Q = \frac{R_r}{R} = \frac{\tau_{nr}}{\tau_{nr} + \tau_r}$

τ_{nr} = non radiation recombination lifetime

R_r = Radiation recombination rate of excess carrier

R = total recombination rate of excess carrier.

$$\frac{1}{\tau_{nr}} = \frac{1}{\tau_{SRH}} + \frac{1}{\tau_a}$$

$$\tau_{nr} = \frac{\tau_a \tau_{SRH}}{\tau_a + \tau_{SRH}} = \frac{10 \times 25}{10 + 25} = \frac{250}{35} = \frac{50}{7}$$

$$\tau_{nr} = \frac{50}{7} \text{ n sec.}$$

$$\therefore \eta_Q = \frac{\frac{50}{7}}{\frac{50}{7} + 5} \times 100\%$$

$$\therefore \eta_Q = \frac{50}{85} \times 100\%$$

$$\boxed{\eta_Q = 58.82\% \cong 59\%}$$

Bandwidth of LED

$$\text{Electrical Bandwidth} = \frac{1}{\tau_{net}}$$

$$= \frac{1}{\frac{50}{17} \times 10^{-9}} = \frac{17}{50} \times 10^9 \text{ rad/sec}$$

$= 0.34 \times 10^9$ rad/sec

$$\text{Optical Bandwidth} = \frac{\sqrt{3}}{\tau_{net}} = \frac{\sqrt{3} \times 17}{50} = 10^9 \text{ rad/sec}$$

$= 5.89 \times 10^8$ rad/sec.

(ii)

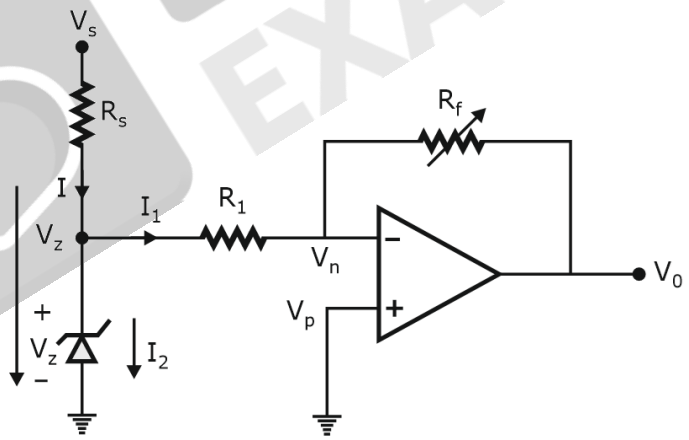

For ideal Op-amp $V_p = V_n = 0$ Virtual Ground process

Let Zener diode is in breakdown region.

$I = I_Z + I_1$ ... (1)

Where $I_1 = \frac{V_z - V_n}{R_1} = \frac{V_z - 0}{R_1} = \frac{V_z}{R_1}$ ... (2)

$I = \frac{V_s - V_z}{R_s}$ ... (3)

From (1)

$$I_z = I - I_1 \le I_{z\,max}.$$

$$\frac{V_s - V_z}{R_s} - \frac{V_z}{R_1} \le I_{z\,max}$$

$$\frac{V_s}{R_s} - \left[\frac{V_z}{R_s} + \frac{V_z}{R_1}\right] \le I_{z\,max}$$

$$\frac{V_s}{R_s} - \frac{V_z\left(R_s + R_1\right)}{R_s R_1} \le I_{z\,max}$$

$$\frac{V_s}{R_s} - \frac{V_z\left[R_s + R_1\right]}{R_s R_1} \le I_{z\,max}$$

$$V_s \le \left[I_{z\,max}\, R_s + \frac{V_2\left(R_s + R_1\right)}{R_1}\right]$$

$$V_{s\,max} = \left[I_{z\,max}\, R_s + \frac{V_2\left(R_s + R_1\right)}{R_1}\right]$$

$$V_{s\,max} = I_{z\,max}\, R_s + \left(1 + \frac{R_s}{R_1}\right) V_z$$

4.(b) (i) State the applications of synchronous motors. Compare synchronous motor with induction motor.

[10 Marks]

(ii) Compare with neat sketches squirrel-cage and slip-ring three-phase induction motor with reference to construction, performance, and applications.

[10 Marks]

Sol. (i) Applications of Three Phase Synchronous Motor

The important characteristic of the synchronous motor is its constant speed irrespective of of the load conditions, and variable power factor operation. As seen earlier its power factor can be controlled by controlling its excitation. For overexcitation its power factor is leading in nature, which is very important from the power factor correction point of view.

Due to constant speed characteristics. It is used in machine tools, motor generator sets, synchronous clocks, stroboscopic devices, timing devices, belt driven reciprocating compressors, fans and blowers, centrifugal pumps, vacuum pumps, pulp grinders, textile mills, paper mills line shafts, rolling mills, cement mills etc.

The synchronous motors are often used as a power factor correction device, phase advancers and phase modifiers for voltage regulation of the transmission lines. This is possible because the excitation of the synchronous motor can be adjusted as per the requirement.

The disadvantages of synchronous motors are their higher cost, necessity of frequent maintenance and a need of d.c. excitation source, auxiliary device or additional winding provision to make it self starting. Overall their initial cost is very high.

Comparison of Synchronous Motor and Induction Motor

S. No.	Synchronous motor	Induction motor
1.	Construction is complicated	Construction is simple, particularly in case of cage rotor.
2.	It is not self-starting	It is self-starting.
3.	A sperate d.c. excitation source is required to excite the rotor.	A sperate d.c. excitation to the rotor is not necessary.
4.	The speed is always synchronous irrespective of the load.	The speed decreases as the load increases.
5.	It operates at synchronous speed and never at speed other than synchronous.	It operates below the synchronous speed and never at the synchronous speed.
6.	Speed control is not possible.	Though difficult, speed control is possible.
7.	By changing its excitation, can be made to operate with wide range of power factors both lagging and leading.	It always operates at lagging power factors and power factor control is not possible.
8.	It can be used as synchronous condenser for power factor improvement.	It can be used as a synchronous condenser.
9.	Motor is more sensitive to sudden load changes. Hunting starts as load changes suddenly.	Less sensitive to sudden load changes. Phenomenon of hunting is absent.
10.	Motor is very much costlier and requires the maintenance.	Motor is much cheaper and almost maintenance free particularly in case of squirrel cage rotors.

(ii)

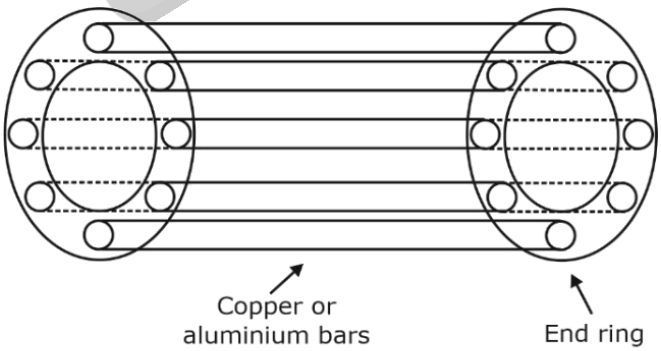

(a) Cage type structure of rotor

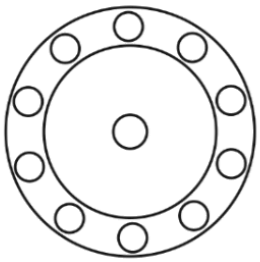

(b) Symbolic representation

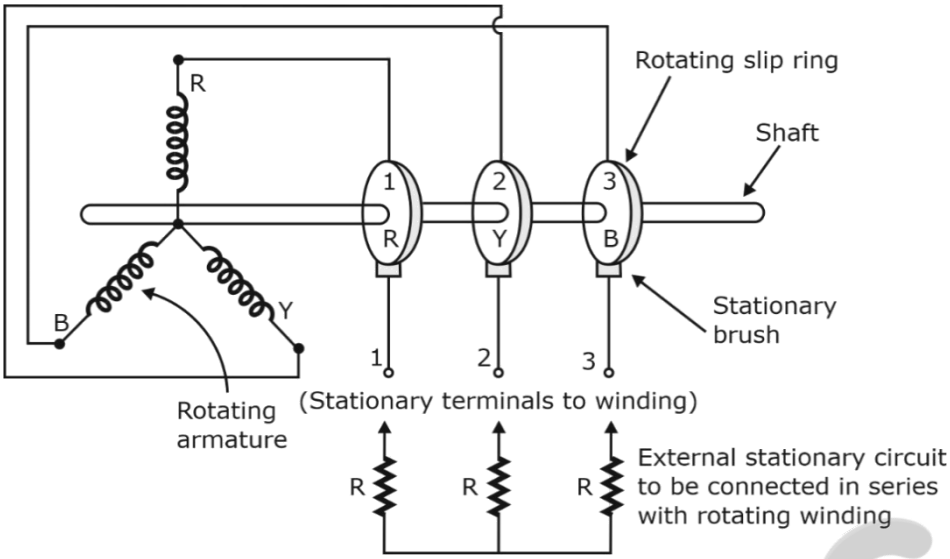

Comparison of Squirrel Cage and Wound Rotor

S. No.	Wound or slip ring rotor	Squirrel cage rotor
1.	Rotor consists of a three phase winding similar to the stator winding.	Rotor consists of bars which are shorted at the ends with the help of end rings.
2.	Construction is complicated.	Construction is very simple.
3.	Resistance can be added externally.	As permanently shorted, external resistance cannot be added.
4.	Slip rings and brushes are present to add external resistance.	Slip rings and brushes are absent.
5.	The construction is delicate and due to brushes, frequent maintenance is necessary.	The construction is robust and maintenance free.
6.	The rotors are very costly.	Due to simple construction, the rotors are cheap.
7.	Only 5% of induction motors in industry use slip ring rotor.	Very common and almost 95% induction motors use this type of rotor.
8.	High starting torque can be obtained.	Moderate starting torque which cannot be controlled.
9.	Rotor resistance starter can be used.	Rotor resistance starter cannot be used.
10.	Rotor must be wound for the same number of poles as that of stator.	The rotor automatically adjusts itself for the same number of poles as that of stator.
11.	Speed control by rotor resistance is possible.	Speed control by rotor resistance is not possible.
12.	Rotor copper losses are high hence efficiency is less.	Rotor copper losses are less hence have higher efficiency.
13.	Used for lits, hoists, cranes, elevators, compressors etc.	Used for lathes, drilling machines, fans, blowers, water pumps, grinders, printing machines etc.

4.(c) What is magnetic anisotropy? Explain the importance of magnetic anisotropy in transformer cores.

[20 Marks]

Sol. Magnetic anisotropy refers to the property of a material that exhibits different magnetic characteristics along different crystallographic directions or axes.

The importance of magnetic anisotropy in transformer cores lies in its effect on the core's magnetic behavior and performance. Here are a few key points:

1. Reduced Core Losses: Magnetic anisotropy helps to minimize core losses in transformers. Core losses occur due to hysteresis and eddy currents. Hysteresis losses arise from the energy dissipation during the repeated magnetization and demagnetization cycles of the core material. Magnetic anisotropy allows the core to be magnetized along the direction of lower magnetic losses, reducing hysteresis losses.
2. Preferred Direction of Magnetization: Magnetic anisotropy allows a transformer core to have a preferred direction of magnetization. This means that the core exhibits higher magnetic permeability and lower magnetic losses in a specific direction compared to other directions. This preferred direction aligns with the core's magnetic domains, facilitating efficient magnetic flux flow.
3. Improved Core Stability: Magnetic anisotropy provides stability to the transformer core by preventing undesirable changes in its magnetic properties. It helps maintain the alignment of the magnetic domains in the core, even under varying magnetic fields and operational conditions. This stability is crucial for maintaining the transformer's performance and preventing core saturation or flux leakage.
4. Enhanced Magnetic Flux Concentration: Magnetic anisotropy allows the transformer core to concentrate and guide the magnetic flux in a specific direction. This ensures that a significant portion of the generated magnetic field is confined within the core, minimizing stray losses and improving the overall efficiency of the transformer.
5. Design Flexibility: Magnetic anisotropy offers flexibility in transformer core design. By utilizing materials with specific magnetic anisotropy properties, designers can tailor the magnetic behavior of the core to meet specific requirements, such as reducing losses, improving efficiency, or enhancing the power handling capacity of the transformer.

Overall, It contributes to the overall performance, efficiency, and reliability of the transformer system.

SECTION-'B'

5.(a) Draw the block diagram of digital data acquisition system and explain the essential function of each block and component.

[12 Marks]

Sol. **DIGITAL DATA ACQUISITION SYSTEM**

A generalized diagram of a digital data acquisition system is shown in figure.

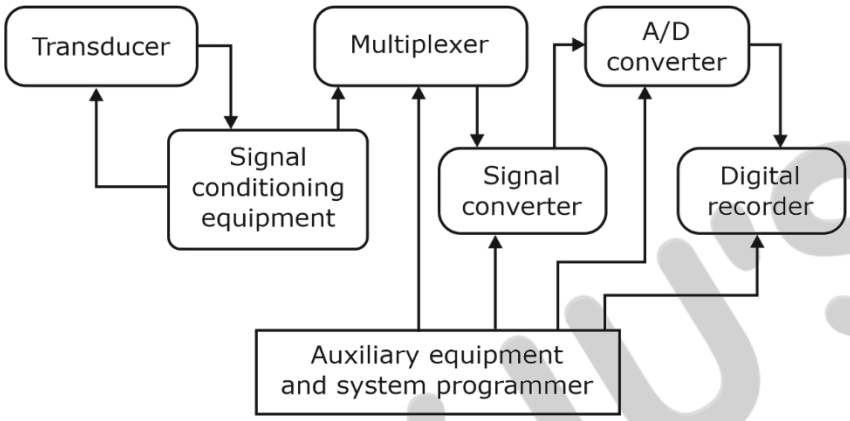

A digital data acquisition system may include some or all of the components shown in figure. The essential functional operations of a digital data acquisition system are:

(a) Handling of analog signals,

(b) Making the measurement,

(c) Converting the data to digital form and handling it, and

(d) Internal programming and control.

The various components and their functions are described below:

1. **Transducers:** They convert a physical quantity into an electrical signal which is acceptable by the data acquisition system.
2. **Signal conditioning equipment:** Signal conditioning has already been described in details in chapter 26.
3. **Multiplexer:** Multiplexing is the process of sharing a single channel with more than one input. Thus, a multiplexer accepts multiple analog inputs and connects them sequentially to one measuring instrument. Another name for a multiplex is **"scanner"**.
4. **Signal converter:** A signal converter translates the analog signal to a form acceptable by the analog to digital (A/D) conveter. An example of the signal converter is an amplifier for amplifying the low-level signal voltages produced by transducers.
5. **Analog to digital converter (A/D converter):** An A/D converter converts the analog voltage to its equivalent digital form. The output of the A/D converter may be fed to digital display devices for visual display or may be fed to digital recorders for recording. It may be fed to a digital computer for data reduction and further processing.

6. **Auxiliary equipment:** This contains devices for system programming functions and digital data processing. Some of the typical functions done by auxiliary equipment are linearization and limit compression of signals. These functions may be performed by individual deices or by a digital computer.
7. **Digital recorders:** Records of information in digital form may be had on punched cards, perforated paper types, type written pages, floppy, discs, magnetic tape, or a combination of these system.
8. **Digital printers:** After all the tests have been completed and the data generated, it becomes necessary to record the numbers and in some cases reduce the data to a more meaningful form. A digital printer can be specified to interface with an electronic instrumentation system in order to perform this work, and thus provide a high quality hard copy for records and minimizing the labour of the operating staff.

5.(b) Obtain the transfer function $H(s) = \frac{V_0}{V_s}$ for the circuit given below:

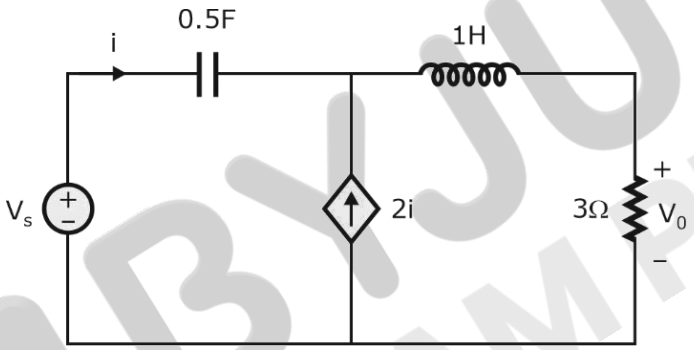

[12 Marks]

Sol. Obtain the transfer function $H(s) = \frac{V_o}{V_s}$ for the circuit given below:

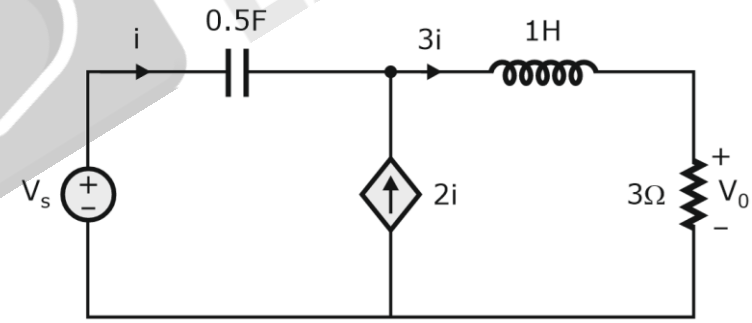

By Laplace transform, we can write,

$$V_s(s) = \frac{1}{Cs} i(s) + sL\left(3i(s)\right) + 3i(s)$$

$$V_s(s) = i(s)\left[\frac{1}{0.5s} + 3s + 3\right] = i(s)\left[\frac{2}{s} + 3s + 3\right] = i(s)\left[\frac{3s^2 + 3s + 2}{s}\right]$$

and $V_0(s) = 3 \times 3i(s) = 9\, i(s) = 9 \cdot \frac{V_s(s)}{\left[\frac{3s^2 + 2s + 2}{s}\right]}$

$$\frac{V_0(s)}{V_s(s)} = \frac{9s}{3s^2 + 2s + 2}$$

5.(c) For the given circuit, find the value of R, if the maximum power delivered to the load is 3 mW:

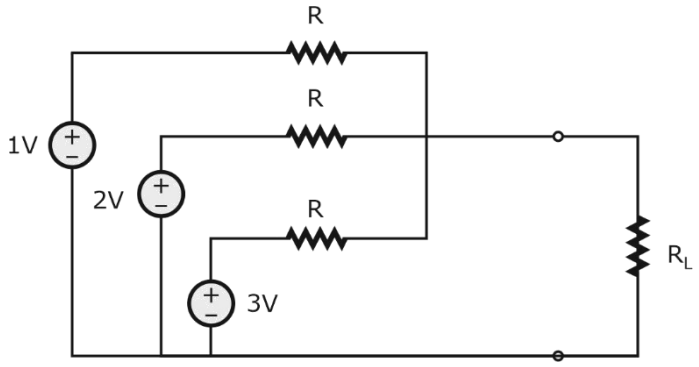

[12 Marks]

Sol. V_{th} Calculation:

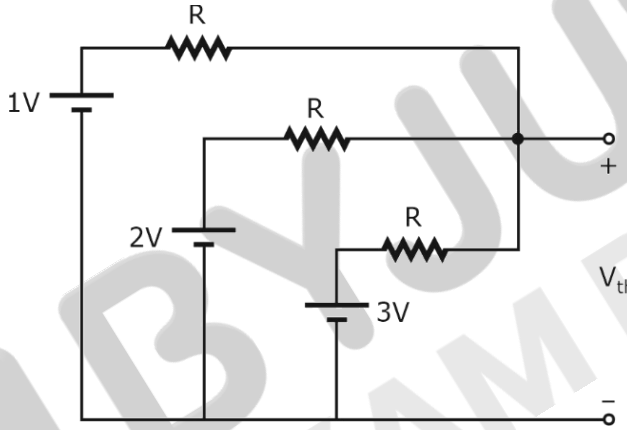

By Nodal Analysis

$$\frac{V_{th} - 1}{R} + \frac{V_{th} - 2}{R} + \frac{V_{th} - 3}{R} = 0$$

$$V_{th}\left[\frac{3}{R}\right] = \frac{1}{R}[6]$$

$$\boxed{V_{th} = 2 \text{ volts}}$$

R_{th} Calculation: Replace voltage source by short circuit,

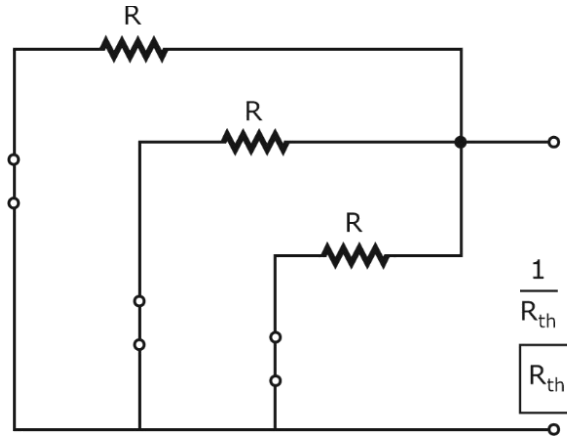

$$\frac{1}{R_{th}} = \frac{1}{R} + \frac{1}{R}$$

$$\boxed{R_{th} = \frac{R}{3}\ \Omega}$$

Thevenin's equivalent circuit

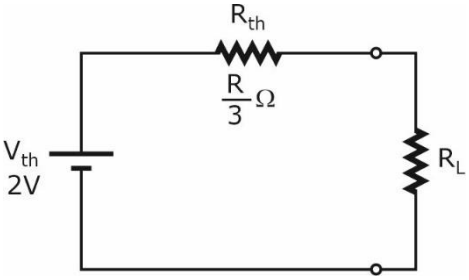

Given, $P_{L_{max}} = 3mW$

For maximum power transfer to R_L

$$R_L = R_{th} = \frac{R}{3}$$

$$\therefore P_{L_{max}} = \frac{V_{th}^2}{4\,R_{th}} = \frac{(2)^2}{4 \times \frac{R}{3}}$$

$$3 \times 10^{-3} = \frac{4}{4\,R/3}$$

$$\boxed{R = 1\ k\Omega}$$

5.(d) The transistor T_1 has negligible collector-to-emitter saturation voltage as shown in the figure below. Also, the diode drops negligible voltage when conducting. If the power supply is +5V, A and B are digital signals with V_{CC} as logic 1 and 0 V as logic 0, find the Boolean expression for output C:

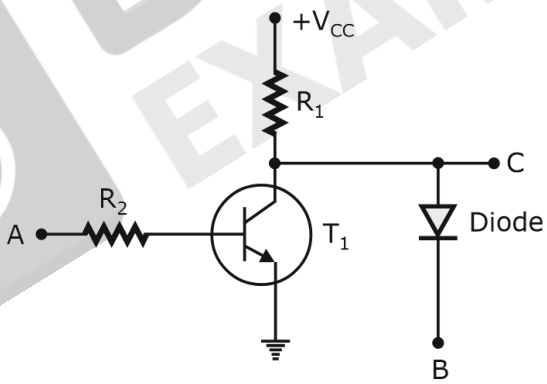

[12 Marks]

Sol.

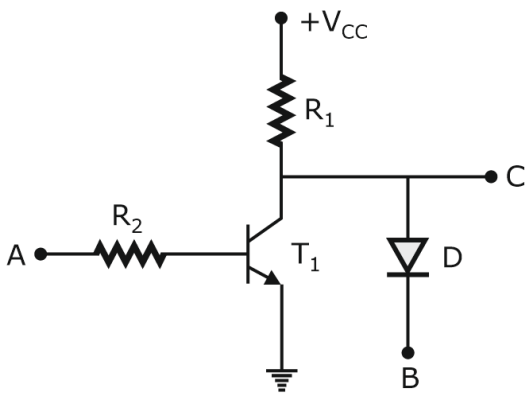

	A	B	T_1	D	C
(1)	0	0	OFF	ON	0
(2)	0	1	OFF	OFF	1
(3)	1	0	ON	ON	0
(4)	1	1	ON	OFF	0

$\boxed{C = \bar{A}B}$

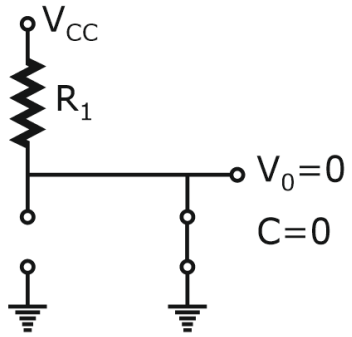

1.

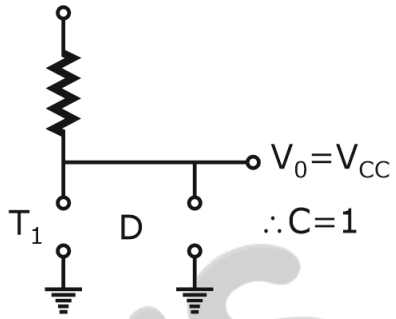

2.

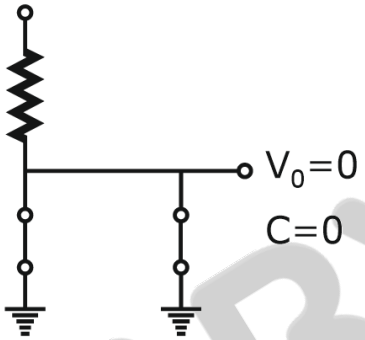

3.

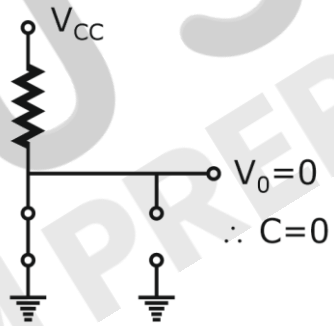

4.

5.(e) Explain the operation of the circuit shown below. Include a description of its output waveform, including its amplitude and period:

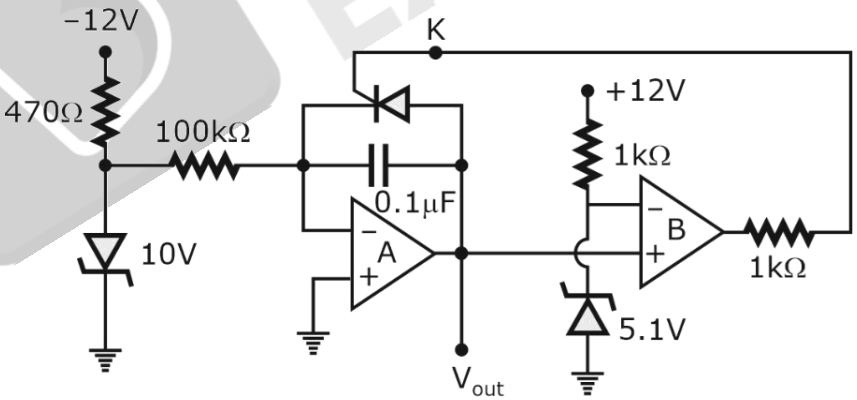

The device which is connected in parallel to the capacitor can be considered a controlled diode which conducts in one direction only, when triggered by a positive trigger at the control input K, and stops conducting when a negative trigger is applied or if the forward bias to it is removed, similar to an SCR.

Assume that the capacitor is uncharged initially.

[12 Marks]

Sol.

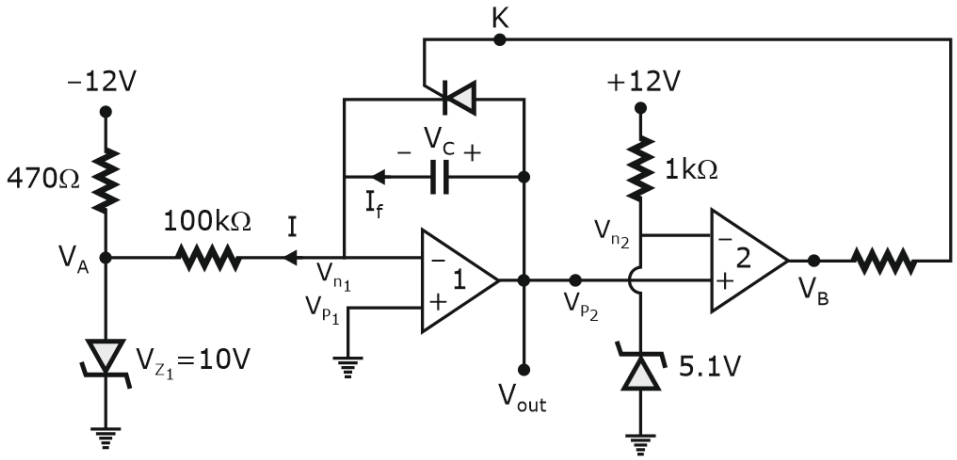

Op-Amp 1:

It is a Integrator

$V_A = -V_{z_1} = -10V$ ... (1)

$\because\ V_{P_1} = V_{n_1} = 0$ Virtual Ground Process

$I_f = I = \dfrac{0 - V_A}{100\ k\Omega} = \dfrac{10}{100} = 0.1\ mA$ ... (2)

When diode is OFF,

Then $V_{out} = V_C = \dfrac{Q}{C} = \dfrac{I_f t}{C}$ ... (3)

$V_{out} = \dfrac{0.1 \times 10^{-3} t}{0.1 \times 10^{-6}} = 10^3 t$ Volt ... (4)

Op-Amp 2:

It is a comparator

$V_{n_2} = V_{ref} = V_{z_2} = 5.1\,V$ ... (5)

$V_{P_2} = V_{out}$

Condition	Vx	SCR (Diode)	Remark
$V_{P_2} > V_{n_2}$	$+V_e$	ON	Capacitor will Discharge
$V_{P_2} < V_{n_2}$	$-V_e$	OFF	Capacitor will charge linearly

Capacitor will charge with constant current. I_f = 0.1 mA & when $V_{out} = V_{P_2} = 5.1V$ output of comparator i.e., V_B become positive & Diode D will be forward biased So, capacitor discharge to zero. Therefore $V_{out} = V_{C_2} = 0$ & now, $V_{out} = V_{P_2} < V_{n_2}$

∴ Therefore, V_B become negative & now diode is RB & again capacitor will charge. Thus, cycle repeats.

Waveform

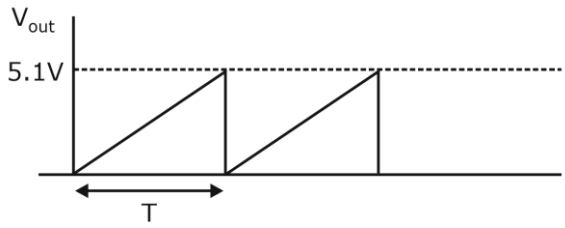

At t = T, V_{out} = 5.1V

5.1 = 10^3T

From equation (4), V_{out} = 10^3t

$$T = \frac{5.1}{10^3}\ \text{sec} = 5.1\ \text{msec}$$

$$\text{Frequency } f = \frac{1}{T} = \frac{1}{5.1 \times 10^{-3}} = \frac{1000}{5.1} \cong 196.1\ \text{Hz}$$

6.(a) **(i)** Define noise. Explain with examples the generated noise, conducted noise and radiated noise. Describe the techniques used for reducing the magnitude of the above-mentioned categories of noise.

[10 Marks]

(ii) An amplifier whose bandwidth is 100 kHz has a noise power spectrum density input of 7 × 10^{-21} J. If the input resistance is 50 kΩ and the amplifier gain is 100, what is the noise output voltage?

[10 Marks]

Sol. **(i)** Noise refers to any unwanted or undesired electrical or electromagnetic signal that interferes with the normal functioning of a system or device. It can be generated internally within a system or device or can be received from external sources. Noise can cause distortion, degradation, or disruption of signals, leading to poor performance or malfunctioning of electronic equipment.

1. Generated Noise:

2. Generated noise is produced within a system or device due to various internal factors. Some common examples of generated noise include:

a. Thermal Noise: Also known as Johnson-Nyquist noise, it is generated due to the random motion of electrons within conductors. It is present in all electronic components and increases with temperature. For example, the noise heard on a poorly tuned radio station is an example of thermal noise.

b. Shot Noise: It arises from the discrete nature of electric current flow due to the movement of individual charge carriers (electrons). Shot noise is predominant in low-current devices such as photodetectors or semiconductor devices.

c. Transit-Time Noise: This noise occurs in devices that involve charge carriers with finite transit times, such as certain types of diodes or transistors. It arises due to variations in the

time taken by charge carriers to cross the device, leading to fluctuations in the current or voltage.

1. Conducted Noise:

2. Conducted noise refers to the noise that travels through electrical conductors or wiring within a system. It can be coupled from external sources or generated internally. Examples of conducted noise include:

a. Power Supply Noise: Switching power supplies or other devices with rapidly changing current demands can introduce noise into the power lines. This noise can then propagate through the conductors and affect other devices connected to the same power source.

b. Crosstalk: When signals from one conductor or transmission line couple into adjacent conductors, it leads to crosstalk. This can occur in high-speed digital communication systems or in close proximity wiring, causing signal interference and degradation.

1. Radiated Noise:

2. Radiated noise refers to the electromagnetic energy that is emitted from a source and propagates through free space or the surrounding environment. It can be generated by electronic devices and can interfere with nearby equipment or communication systems. Examples of radiated noise include:

a. Electromagnetic Interference (EMI): EMI is generated when electronic devices emit electromagnetic energy that interferes with the operation of other nearby devices. For instance, a poorly shielded electronic device may emit radio frequency (RF) noise that disrupts the functioning of a neighboring device.

b. Radio Frequency Interference (RFI): RFI refers specifically to unwanted radio frequency signals that can interfere with the reception of desired signals. It can be caused by various sources such as power lines, motors, or electronic devices operating at RF frequencies.

Techniques for reducing noise:

1. **Shielding:** Shielding involves enclosing sensitive components or devices in conductive materials to block external electromagnetic fields. This prevents radiated noise from entering or leaving the system.
2. **Filtering:** Filters are used to attenuate specific frequencies of noise. Common types of filters include low-pass, high-pass, bandpass, or notch filters. They can be implemented using passive components like resistors, capacitors, and inductors or through active circuits.
3. **Grounding:** Proper grounding techniques are employed to minimize the effects of conducted noise. This includes connecting components to a common ground point to provide a low-impedance path for unwanted currents.
4. **Twisted Pair Wiring:** In communication systems, twisted pair wiring is often used to reduce crosstalk between signal lines. By twisting the wires, the electromagnetic coupling between adjacent wires is minimized.

5. Ferrite Beads: Ferrite beads or chokes are used to suppress high-frequency noise by introducing impedance to the noise currents. They are often placed on cables.

(ii) Given: B_n = 100 kHz; $N_0 = 7 \times 10^{-21}$ J; R_L = 50 kΩ; G = 100

Noise voltage, $$V_n = \sqrt{4kTB_nR_L} \times G$$

$$N_0 = kT = 7 \times 10^{-21} \text{ J}$$

$$\therefore \quad V_n = \sqrt{4 \times 7 \times 10^{-21} \times 100 \times 10^3 \times 50 \times 10^3} \times 100$$

$$V_n = 1.183 \times 10^{-3} \text{ Volt} = 1.183 \text{ mV}$$

6.(b) Describe in brief the different methods used for measurement of medium resistances.

[20 Marks]

Sol. **Measurement of Medium Resistances**

The different methods used for measurement of medium resistances are:

(i) Ammeter-Voltmeter method

(ii) Substitution method

(iii) Wheatstone bridge method

(iv) Ohmmeter method.

Ammeter-Voltmeter Method

This method is very popular since the instruments required for this test are usually available in the laboratory. The two types of connections employed for ammeter-voltmeter method are shown in Figs. (a) and (b). In both the cases, if readings of ammeter and voltmeter are taken, then the measured value of resistance is given by:

$$R_m = \frac{\text{Voltmeter reading}}{\text{ammeter reading}} = \frac{V}{I} \quad \ldots (1)$$

The measured value of resistance R_m would be equal to the true value, R, if the ammeter resistance is zero and the voltmeter resistance is infinite, so that the conditions in the circuit are not disturbed. However, in practice this is not possible and hence both the methods give inaccurate results.

Consider the circuit of figure. In this circuit the ammeter measures the true value of the current through the resistance, but the voltmeter does not measure the true voltage across the resistance. The voltmeter indicates the sum of the voltages across the ammeter and the measured resistance.

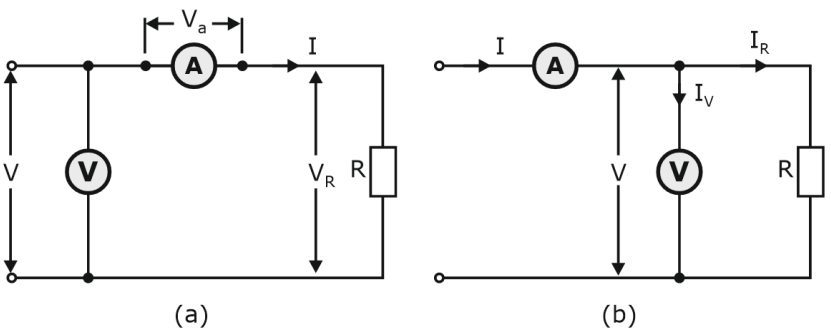

Let R_a be the resistance of the ammeter.

∴ Voltage across the ammeter, $V_a = IR_a$

Now, measured value of resistance.

$$R_{m_1} = \frac{V}{I} = \frac{V_R + V_a}{I} = \frac{IR + IR_a}{I} = R + R_a \quad \text{... (2)}$$

∴ True value of resistance,

$$R = R_{m_1} - R_a \quad \text{... (3)}$$

$$R = R_{m_1}\left(1 - \frac{R_a}{R_{m_1}}\right) \quad \text{... (4)}$$

Thus the measured value of resistance is higher than the true value. It is also clear from above that the true value is equal to the measured only if the ammeter resistance, R_a, is zero.

Relative error, $\varepsilon_r = \frac{R_{m_1} - R}{R} = \frac{R_a}{R}$ ... (5)

It is clear from Equation that the error in measurements would be small if the value of resistance under measurement is large as compared to the internal resistance of the ammeter. Therefore the circuit of figure should be used when measuring high resistance values.

Substitution Method

The connection diagram for this method is shown in fig. R is the unknown resistance while S is a standard variable resistance. There is a switch for putting R and S into the circuit alternately. The switch is put at position 'I' and resistance R is connected in the circuit. The regulating resistance r is adjusted till the ammeter pointer is at a chosen scale mark. Now, the switch is thrown to position '2' putting the standard variable resistance S in the circuit. The value of S varies till the same deflection as was obtained with R in the circuit is obtained. The stings of the dials of S are read. Since the substitution of one resistance for another has left the current uttered, and provided that the emf of battery and the position of r are unaltered, the two resistances must be equal. Thus the value of unknown resistance R is equal to the dial setting of resistance S.

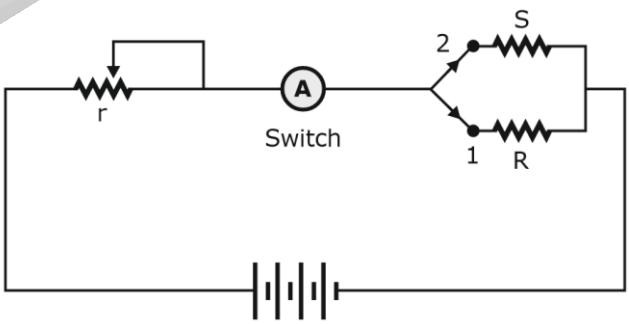

This is a more accurate method than the Ammeter-Voltmeter method, as it is not subject to the errors encountered in the latter method. However, the accuracy of this method is greatly affected if there is any change in the battery emf during the time the readings on the two settings are taken. Thus in order to avoid errors on this account, a battery of ample capacity should be used so that its emf remains constant.

The accuracy of the measurement naturally depends upon the constancy of the battery emf and of the resistance of the circuit excluding R and S, upon the sensitivity of the instrument, and upon the accuracy with which standard resistance S is known.

This method is not widely used for simple resistance measurements and is used in a modified form for the measurement of high resistances. The substitution principle, however, is very important and finds many applications in bridge methods and in high frequency a.c. measurements.

Wheatstone Bridge

A very important device used in the measurement of medium resistances is the Wheatstone bridge. A Wheatstone bridge has been in use longer than almost any electrical measuring instrument. It is still an accurate and reliable instrument and is extensively used in industry. The Wheatstone bridge is an instrument for making comparison measurements and operates upon a null indication principle. This means the indication is independent of the calibration of the null indicating instrument or any of its characteristics. For this reason, very high degrees of accuracy can be achieved using Wheatstone bridge. Accuracy of 0.1% is quite common with a Wheatstone bridge as opposed to accuracies of 3% to 5% with ordinary ohmmeter for measurement of medium resistances. Figure shows the basic circuit of a Wheatstone bridge. It has four resistive arms, consisting of resistances P, Q, R and S together with a source of emf (a battery) and a null detector, usually a galvanometer G or other sensitive current meter. The current through the galvanometer depends on the potential difference between points cand d. The bridge is said to be balanced when there is no current through the galvanometer or when the potential difference across the galvanometer is zero. This occurs when the voltage from point ‘b’ point ‘d’ equals the voltage from point 'd’ to point ‘b’; or, by referring to the other battery terminal, when the voltage from point 'd’ to point 'c’ equals the voltage from point ‘b’ to point ‘c’.

For bridge balance, we can write,

$I_1P = I_2R$

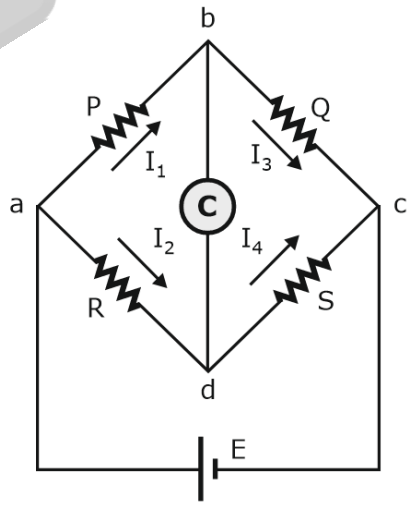

For the galvanometer current to be zero, the following conditions also exist:

$$I_1 = I_3 = \frac{E}{P+Q}$$

and $I_2 = I_4 = \frac{E}{R+S}$

where E = emf of the battery.

Combining Equations simplifying, we obtain:

$$\frac{P}{P+Q} = \frac{R}{R+S}$$

from which QR = PS

Equation is the well-known expression for the balance of Wheatstone bridge. If three of the resistance are known, fourth may be determined from equation and we obtained:

$$R = S\frac{P}{Q}$$

Where R is the unknown resistance, S is called the 'standard arm' of the bridge and P and Q are called the 'ratio arms'.

6.(c) Find the Z parameters of the network given below:

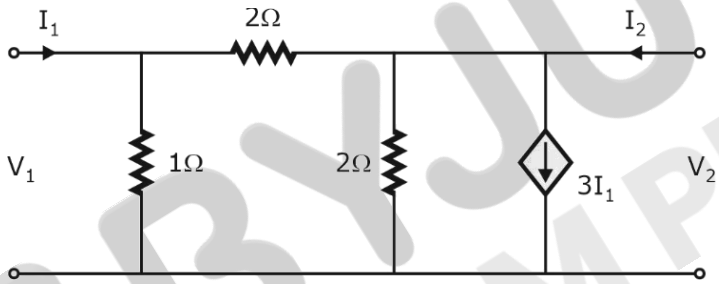

[20 Marks]

Sol. From the given figure,

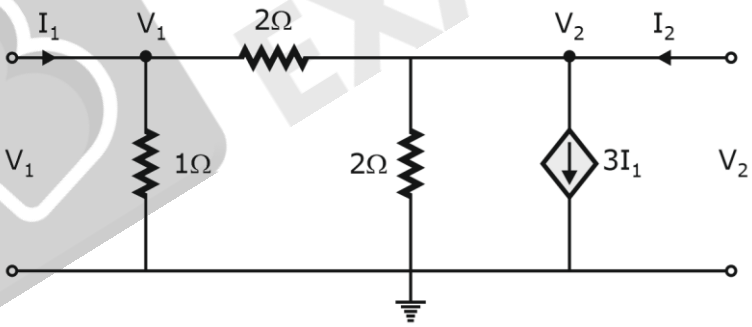

By applying nodal,

$$I_1 = \frac{V_1}{1} + \frac{V_1 - V_2}{2}$$

$\Rightarrow 2I_1 = 2V_1 + V_1 - V_2$

$2I_1 = 3V_1 - V_2$ … (1)

and $I_2 = \frac{V_2 - V_1}{2} + \frac{V_2}{2} + 3I_1$

$2I_2 = V_2 - V_1 + V_2 + 6\ I_1$

$2I_2 = 2V_2 - V_1 + 6I_1$ … (2)

$$V_2 = \frac{2I_2 + V_1 - 6I_1}{2} \ldots(3)$$

By substituting (3) in (1)

$$2I_1 = 3V_1 - \left[\frac{2I_2 + V_1 - 6I_1}{2}\right]$$

$$2I_1 = 3V_1 - I_2 - \frac{V_1}{2} + 3I_1$$

$$\frac{5V_1}{2} = -I_1 + I_2$$

$$V_1 = \frac{-2}{5} I_1 + \frac{2}{5} - 2$$

$$V_1 = \frac{-2}{5} I_1 + \frac{2}{5} I_2$$

Comparing with $V_1 = Z_{11} I_1 + Z_{12} I_2$

$$Z_{11} = \frac{-2}{5}\Omega \text{ and } Z_{12} = \frac{2}{5}\Omega$$

from (1) & (2),

i.e., $2I_1 = 3V_1 - V_2 \ldots (1)$

$2I_2 = 2V_2 - V_1 + 6I_1 \ldots (2)$

Substitute $V_1 = \frac{2I_1 + V_2}{3}$ from (1) into eqn. (2)

$$2I_2 = 2V_2 - \left[\frac{2I_1 + V_2}{3}\right] + 64 = 2V_2 - \frac{2}{3} I_1 - \frac{V_2}{3} + 64$$

$$\frac{5V_2}{3} = \frac{-16}{3} I_1 + 2I_2$$

$$V_2 = -\frac{16}{5} I_1 + \frac{6}{5} I_2$$

Compare with $V_2 = Z_{21} I_1 + Z_{22} I_2$

$$z_{Z1} = \frac{-16}{5}\Omega, z_{Z2} = \frac{6}{5}\Omega$$

$$\therefore [z] = \begin{bmatrix} z_{11} & z_{12} \\ z_{21} & z_{22} \end{bmatrix} = \begin{bmatrix} \frac{-2}{5} & \frac{2}{5} \\ \frac{-16}{5} & \frac{6}{5} \end{bmatrix}$$

7.(a) (i) The ABCD parameters of the two-port network in the given figure are $\begin{bmatrix} 4 & 20\,\Omega \\ 0.1\,S & 2 \end{bmatrix}$

The output port is connected to a variable load for maximum power transfer. Find R_L and the maximum power transferred:

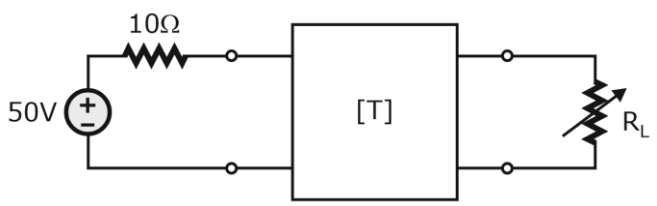

[15 Marks]

(ii) Find the T network equivalent to the π network give in the figure in s-domain using Laplace transform:

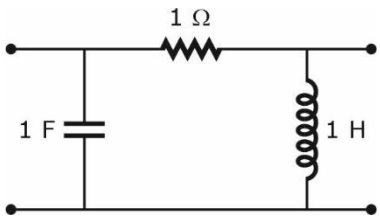

Find the element values for s = j1.

[5 Marks]

Sol. **(i)** The ABCD parameters of the two-port network in the given figure are

$$\begin{bmatrix} 4 & 20\,\Omega \\ 0\cdot 1\,S & 2 \end{bmatrix}$$

The output port is connected to a variable load for maximum power transfer. Find R_L and the maximum power transferred:

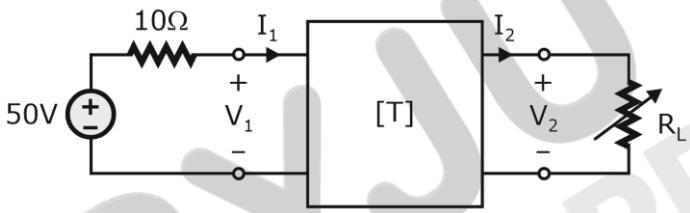

$V_1 = AV_2 + BI_2$

$I_1 = CV_2 + DI_2$

& in left side loop equation

$50 = V_1 + 10I_1$ ...(a)

From given data,

$V_1 = 4V_2 + 20\ I_2$ ... (1)

$I_1 = 0.1\ V_2 + 2I_2$ ... (2)

By open circuit load and calculate $V_2(O.C.) = V_{Th}$

$\Rightarrow I_2 = 0$

From (1) $\Rightarrow V_1 = 4V_2$ ... (3)

& from (2) $\Rightarrow I_1 = 0.1\ V_2$ ... (4)

$$\frac{(3)}{(4)} \Rightarrow V_1 = 40\ I_1$$

$$\Rightarrow 50 = V_1 + 10\left[\frac{V_1}{40}\right] = V_1 + \frac{V_1}{4} = \frac{5V_1}{4}$$

$V_1 = 40$ V

From eqn. (3) $\Rightarrow V_2 = \frac{V_1}{4} = 10$ V

$\therefore V_{Th} = 10V$

R_{Th} calculation:

Short circuit load and find I_2(S.C)

$\Rightarrow V_2 = 0$

By substituting in (1) & (2)

$V_1 = 20I_2$ ...(5)

ad $I_1 = 2I_2$ ...(6)

$$\frac{(5)}{(6)} \Rightarrow V_1 = 10\ I_1$$

Substitute in eqn. (1)

$50 = V_1 + 10I_1$

$= 10I_1 + 10I_1$

$= 20I_1 \Rightarrow I_1 = 2.5$ Amp

From eqn. (6)

$$I_2 = I_2(\text{S.C.}) = \frac{I_1}{2} = 1.25 \text{ Amp}$$

$$\therefore R_{Th} = \frac{V_{OC}}{I_{SC}} = \frac{V_{Th}}{I_{SC}} = \frac{10}{125} = 8\,\Omega$$

$$P_{max} = \frac{V_{Th}^2}{4R_{Th}} = \frac{10^2}{4 \times 8} = 3.125 \text{ watts}$$

(ii) Find the T network equivalent to the π Network given in the figure in s-domain using Laplace transform:

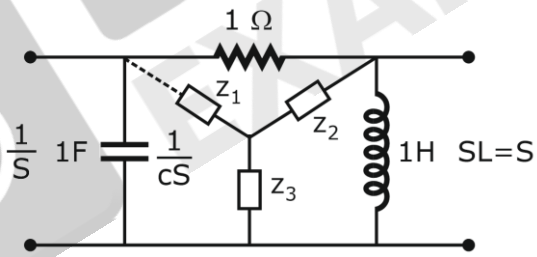

By delta-star conversion

$$z_1 = \frac{1 \times \frac{1}{S}}{1 + \frac{1}{S} + S} = \frac{1}{S^2 + S + 1}$$

$$z_2 = \frac{1 \times S}{1 + \frac{1}{S} + S} = \frac{S^2}{S^2 + S + 1}$$

$$z_3 = \frac{\frac{1}{S} \times S}{1 + \frac{1}{S} + S} = \frac{S}{S^2 + S + 1}$$

$\therefore$ T-network

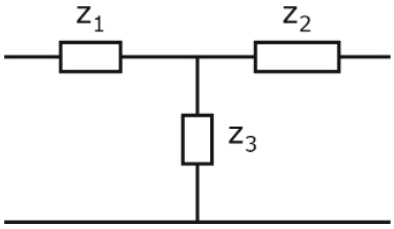

Given S = j1

$$\Rightarrow z_1 = \frac{1}{(j1)^2 + j1 + 1} = -j$$

$$z_2 = \frac{(j1)^2}{(j1)^2 + j1 + 1} = +j$$

$$z_3 = \frac{j1}{(j1)^2 + j1 + 1} = 1$$

7.(b) The switch is moved from position 1 to 2 at t = 0 in the following circuit. The initial conditions are specified as $i_L(0_+) = 2A$, $v_c(0_+) = 2V$. Find the current i(t)for t > 0, assuming L = 1H, R = 3Ω, C = 0.5 F and V_1 = 5V. Use Laplace transform method:

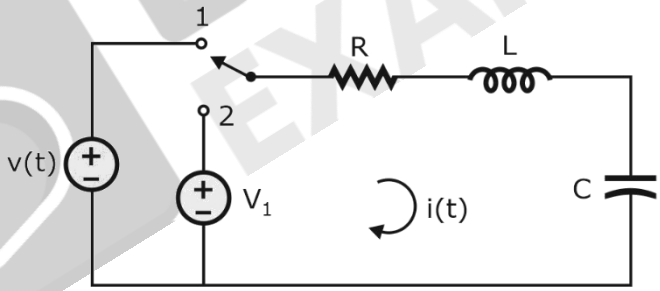

[20 Marks]

Sol.

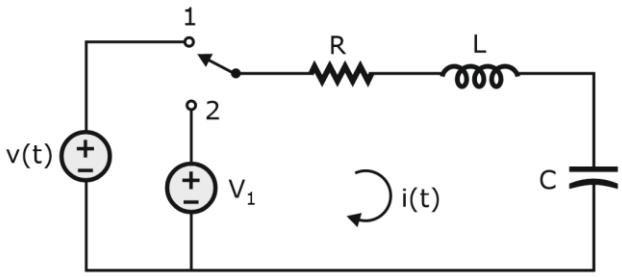

At t < 0,

Given $i_L(0^+) = 2A = I_0$

$V_C(0^+) = 2V = V_0$

And R = 3 Ω, L = 1H and C = 0.5F

At t >0, circuit becomes,

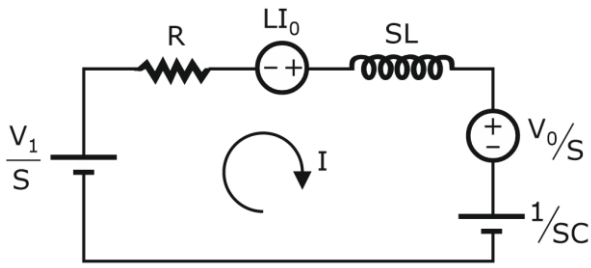

By KVL in loop,

$$\frac{-V_1}{S} + I(S)R - LI_0 + SL\,I(S) + \frac{V_0}{S} + \frac{1}{CS}I(S) = 0$$

$$I(S)\left[R + SL + \frac{1}{CS}\right] - \frac{1}{S}\left[V_1 - V_0\right] = LI_0$$

$$I(S)\left[R + SL + \frac{1}{CS}\right] - \frac{1}{S}\left[V_1 - V_0\right] = LI_0$$

$$I(S)\left[3 + S + \frac{2}{S}\right] - \frac{1}{S}\left[5 - 2\right] = 2$$

$$I(S)\left[\frac{3S + S^2 + 2}{S}\right] - \frac{3}{S} = 2$$

$$I(S) = \frac{2 + \frac{3}{S}}{\left(\frac{S^2 + 3S + 2}{S}\right)} \quad I(S) = \frac{2S + 3}{S^2 + 3S + 2} = \frac{2S + 3}{(S + 1)(S + 2)}$$

$$I(S) = \frac{1}{S + 1} + \frac{1}{S + 2} = e^{-t} + e^{-2t}\,u(t)$$

7.(c) **(i)** Derive the expressions for the current gain g and the input impedance Z_{in} for a common-collector amplifier. Show all necessary steps, starting with the circuit diagram (equivalent circuit model) for the derivation.

[10 Marks]

(ii) Draw the state transition diagram for the logic circuit shown below:

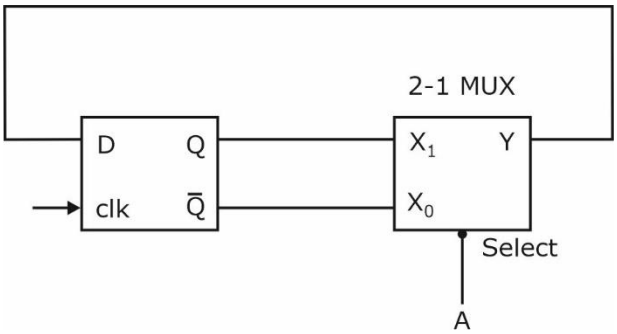

[10 Marks]

Sol. **(i)** Common collector [Emitter follower]

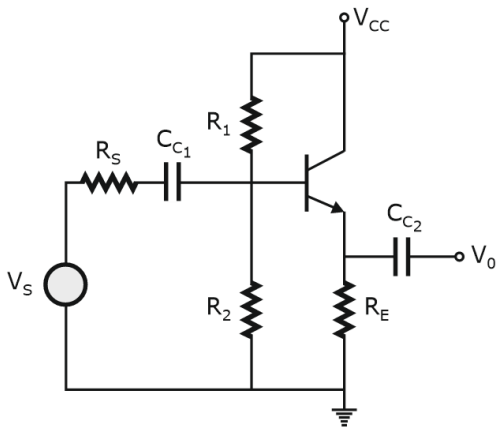

For AC analysis, C_{C1} and C_{C2} acts as short circuit $V_{CC} \rightarrow 0$

R_e model:

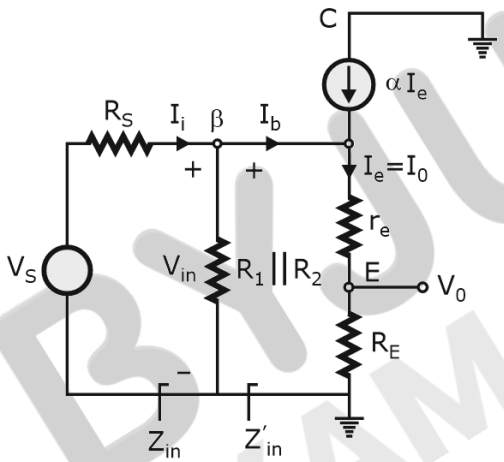

Current gain:

$$A_I = \frac{I_0}{I_b} = \frac{(1+\beta)\, I_b}{I_b}$$

$$A_I = \frac{I_0}{I_b} = (1+\beta)$$

$$\beta = \frac{\alpha}{1-\alpha} \qquad \because I_0 = I_e = (1+\beta)\, I_b.$$

Input Impedance

$$Z'_{in} = \frac{V_{in}}{I_b} = \frac{I_e\,(r_e + R_E)}{I_b} = \frac{(1+\beta)\, I_b\,(r_e + R_E)}{I_b}$$

$$\boxed{Z'_{in} = (1+\beta)\,(r_e + R_E)}$$

$$Z_{in} = (R_1 \,||\, R_2) \,||\, Z'_{in}$$

Note: $Z_{in} < Z'_{in}$

Input impedance decreases due to potential divider biasing.

Resistance seen by V_s

$$\boxed{Z_s = R_s + Z_{in}}$$

(ii)

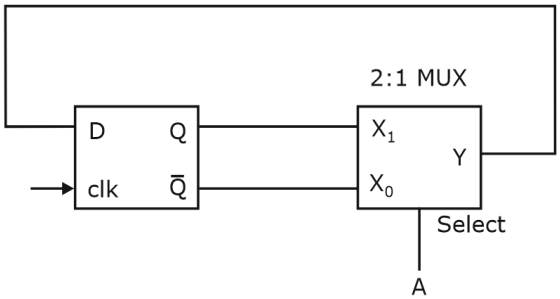

For a 2 : 1 MUX,

If select, A = 0, $y = X_0 = \bar{Q}$

If select, A = 1 $y = X_1 = Q$

For a D flip flop, $Q^+ = D$

So, $Q^+ = D = Y = \begin{cases} \bar{Q}, & \text{if } A = 0 \\ Q, & \text{if } A = 1 \end{cases}$

Drawing state diagram as per above equation:

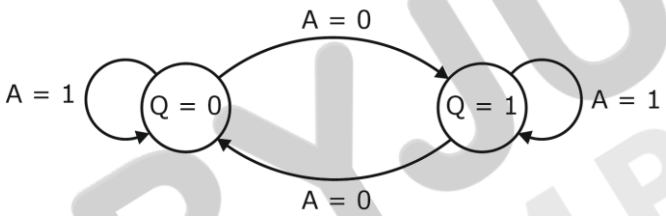

8.(a) (i) An analog switch uses an n-channel MOSFET with $V_{GS(th)}$ = 4V. A voltage of +8V is applied to the gate. Determine the maximum peak-to-peak input signal that can be applied, if the drain-to-source voltage drop is neglected.

Also determine the minimum frequency of the pulses applied to the MOSFET gate, if this switch is used to sample signal with a maximum frequency of 15 kHz.

[10 Marks]

(ii) Determine the maximum I_D and V_{GS} for the circuit given below:

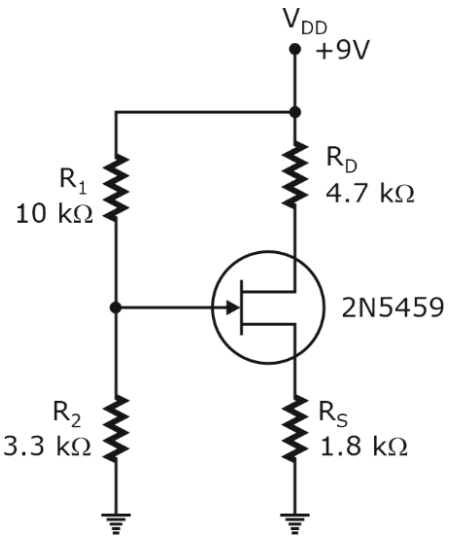

[10 Marks]

Sol. **(i)** N-MOSFET act as a switch.

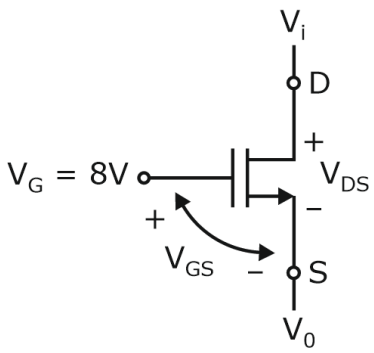

For MOSFET to be ON,

$V_{GS} \geq V_{Th} = 4V$

MOSFET acts as short circuit since $V_{DS} = 0$ (given).

Therefore, $V_0 = V_i$

$V_{GS} = V_G - V_S = 8 - V_0 \geq 4V$

$\boxed{V_0 \leq 4V}$

$\therefore V_i = V_0 \leq 4V$.

Let V_i is a sinusoidal signal then maximum peak to peak input is from –4V to +4V

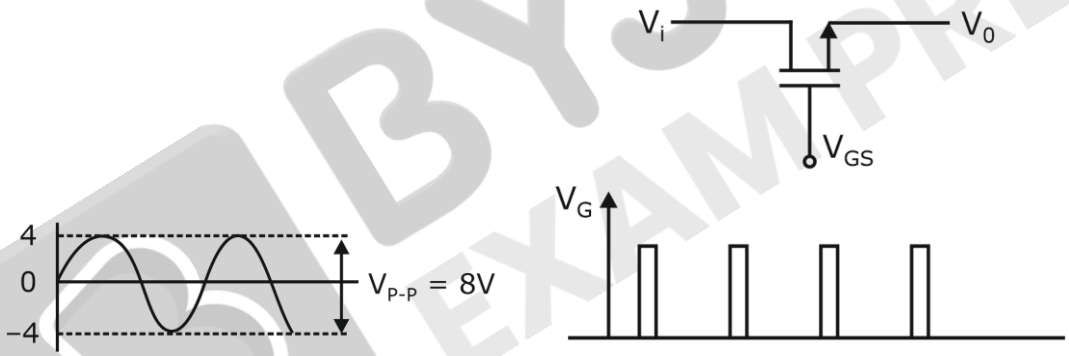

According to sampling theorem,

Frequency of Gate Pulse ≥ 2 × Input signal frequency

$f_G \geq 2f_i$

$f_G \geq 2 \times 15 = 30$ kHz

$\boxed{f_{G\,min} = 30 \text{ kHz}}$

Note: It is a part of sample and hold circuit.

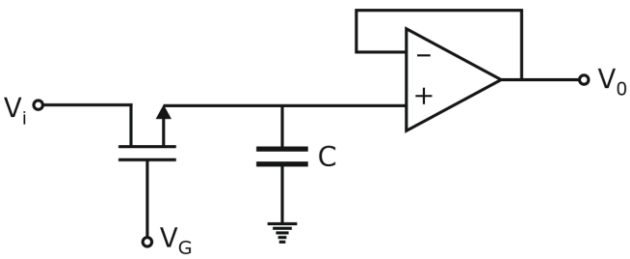

(ii)

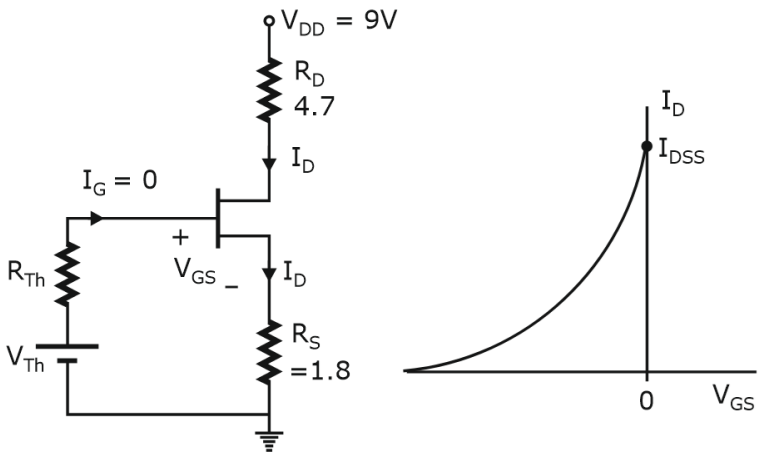

$$V_{Th} = \frac{R_2}{R_1 + R_2} V_{DD} = \frac{3.3}{10 + 3.3} \times 9$$

$$\boxed{V_{Th} = 2.23 \text{ Volt}}$$

$$I_G = 0 \quad \because R_i = \infty$$

KVL at input

$$V_{Th} = V_{GS} + I_D R_S$$

$$I_D = \frac{V_{Th} - V_{GS}}{R_S}$$

for JFET at $V_{GS} = 0$, $I_D = I_{D\,max} = I_{DSS}$

$$I_{D\,max} = \frac{2.23 - 0}{1.8}$$

$$\boxed{I_{D\,max} \cong 1.24 \text{ mA}}$$

8.(b) Determine the lower cut-off frequency of the amplifier shown in the figure:

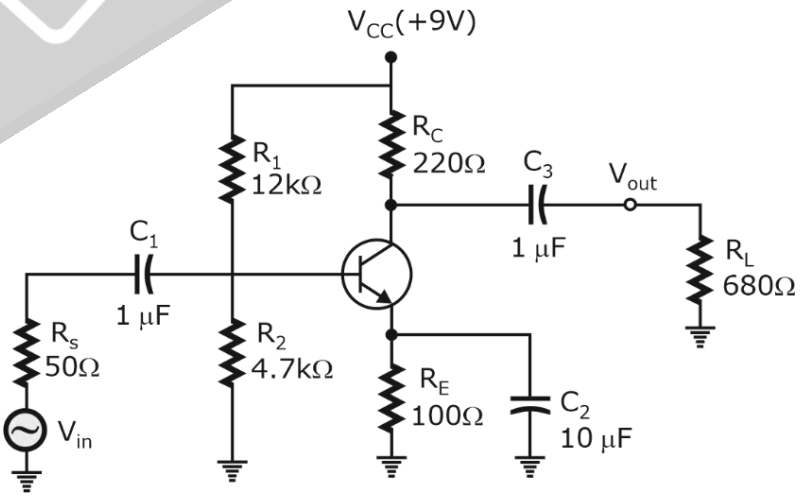

Given, $\beta_{dc} = \beta_{ac} = 125$, $C_{be} = 25$ pF and $C_{bc} = 10$ pF.

Thus, also calculate the voltage gain A_V at lower cut-off frequency.

[20 Marks]

Sol. $\beta_{dc} = 125$

DC analysis

C_1, C_2 & C_3 act as open circuit:

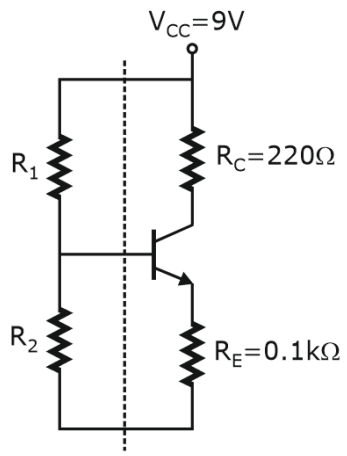

Apply Thevenin Theorem

$$V_{Th} = \frac{R_2}{R_1 + R_2} V_{CC} = \frac{4.7}{12 + 4.7} \times 9 = 2.533\,V$$

$$R_{Th} = R_1 || R_2 = \frac{4.7 \times 12}{4.7 + 12} = 3.377\ k\Omega = 3377\Omega$$

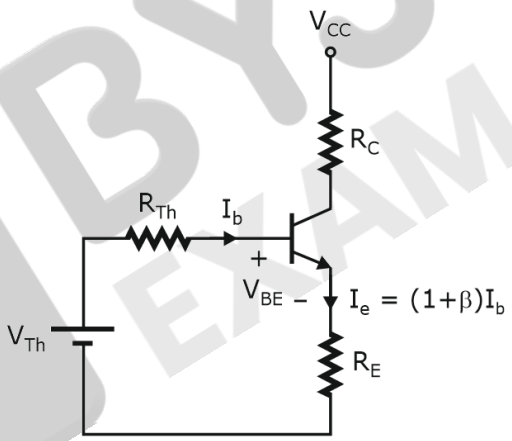

$$V_{Th} = I_B R_{Th} + V_{BE} + (1 + \beta) I_B R_E$$

$$I_B = \frac{V_{Th} - V_{BE}}{R_{Th} + (1 + \beta) R_E} = \frac{2.533 - 0.7}{3.377 + 126 \times 0.1}$$

$$\boxed{I_B = 0.115\ mA}$$

Note: $V_{BE} = 0.7V$ for S_i BJT

$$I_C = \beta I_B = 125 \times 0.115 = 14.375\ mA$$

$$g_m = \frac{I_C}{V_T} = \frac{14.375\ mA}{26\ mV} = 0.552\ A/V.$$

$$r_\pi = \frac{\beta}{g_m} = \frac{125}{0.552} = 226\Omega.$$

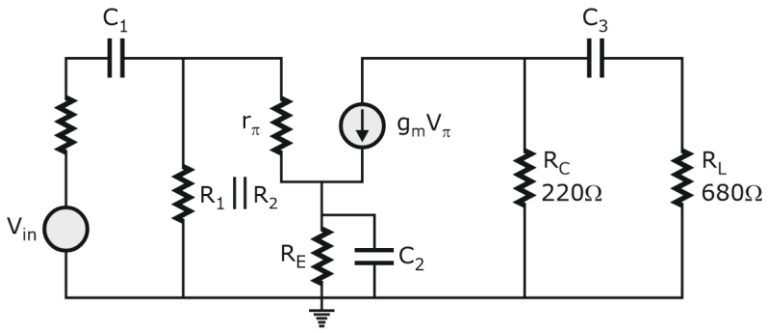

f_L due to C_1 and let C_2 & C_3 act as S.C.

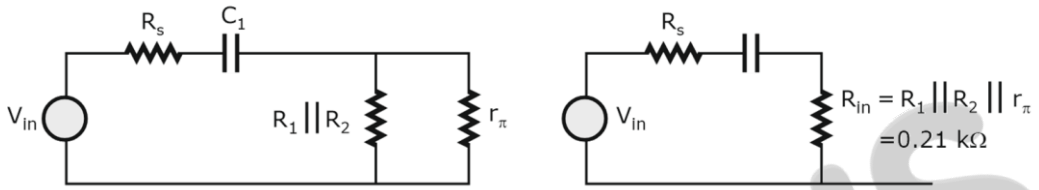

$$f_L = \frac{1}{2\pi[R_S + R_{in}]C_{C_1}} = \frac{1}{2\pi[50+210]\times 10^{-6}} = 612 \text{ Hz (approx)}$$

f_L due to output coupling capacitor C_3

Let C_1 & $C_2 \rightarrow$ S.C.

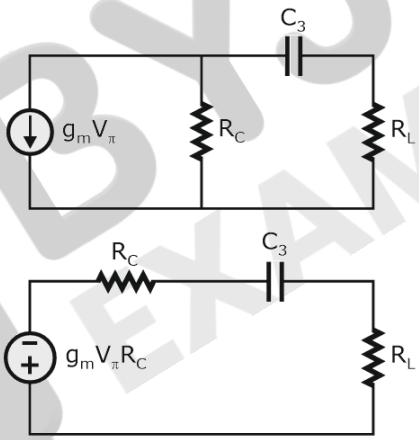

$$f_L = \frac{1}{2\pi[R_C + R_L]\,C_3} = \frac{1}{2\pi[680+220]\times 10^{-6}}$$

$$\boxed{f_L = 176.83 \text{ Hz}}$$

<u>f_L due to by pass capacitor C_2</u>

Let C_1 & C_3 act as short circuit,

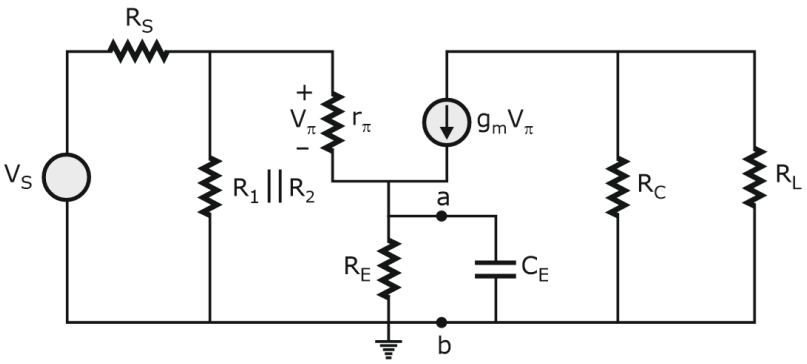

Find R_{Th} across C_E i.e. a – b terminal $V_s \to 0$

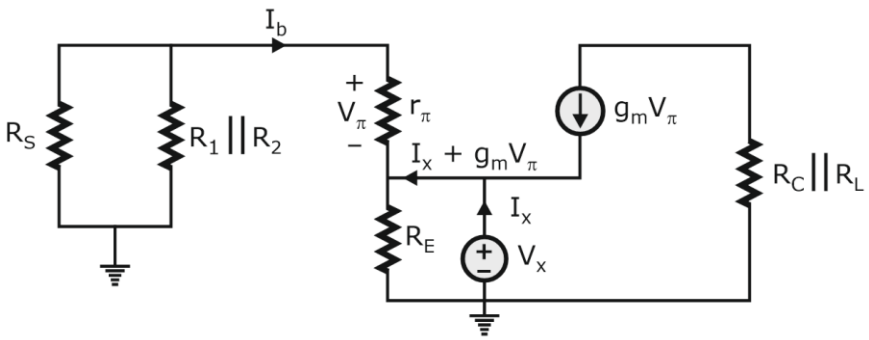

$$R_{Th} = \frac{V_x}{I_x}$$

Let $R_A = R_S || R_1 || R_2$

$R_A = 50 || 3377 \cong 50$

$V_\pi = I_b\, r_\pi$ $\qquad$ $g_m\, V_\pi = g_m\, I_b\, r_\pi$ $\qquad$ ... (1)

<u>KCL at V_x</u>

$$I_X + g_m V_\pi + I_b = \frac{V_x}{R_E} \qquad \text{... (2)}$$

KVL

$I_b R_A + I_b r_\pi + V_x = 0$

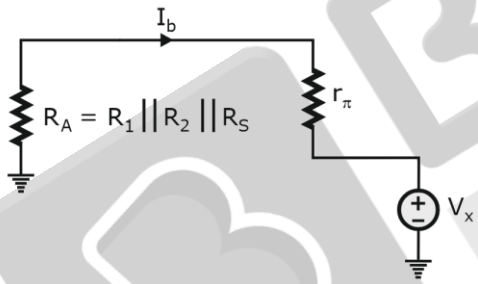

$$I_b = \frac{V_x}{R_A + r_\pi} \qquad \text{... (3)}$$

$$I_X + (g_m r_\pi + 1)\left(\frac{-V_x}{R_A + r_\pi}\right) = \frac{V_X}{R_E}$$

$$I_X = \left[\frac{1}{R_E} + (1 + g_m r_s)\left(\frac{1}{R_A + r_\pi}\right)V_x\right]$$

$$R_{Th} = \frac{V_X}{I_X}$$

$$\because r_\pi = \frac{\beta}{g_m}$$

$g_m r_\pi = \beta = 125$

$$I_X = \left[\frac{1}{R_E} + \frac{1+\beta}{R_A + r_\pi}\right]V_X$$

$$I_X = \left[\frac{1}{100} + \frac{126}{50+266}\right] V_x$$

$$\frac{V_x}{I_X} = 2.14\ \Omega = R_{Th}$$

$$\therefore\ f_L\,(\text{due to } C_2) = \frac{1}{2\pi R_{Th} C_2} = \frac{1}{2\pi(2.14)\times 10\times 10^{-6}} = 7437\ \text{Hz}$$

(1) due to C_1 f_L = 612 Hz

(2) due to C_3 f_L = 176.83 Hz

(3) due to C_2 $f_L \cong$ 7437 Hz

∴ Lower cut off frequency at circuit is f_L = 7437 Hz

Voltage gain at lower frequency BJT act as high Pass filter.

$$\therefore\ A_V = \frac{A_{V\,mid}}{1 - j\,f_e/f}$$

A_V mid → mid band Voltage gain.

f_L → 3dB cut off frequency.

f → instantaneous frequency.

$$f = f_L\ |A_V| = \frac{A_{V\,mid}}{\sqrt{2}}$$

for $A_{V\,mid}$ capacitors C_1, C_2 & C_3 → S.C

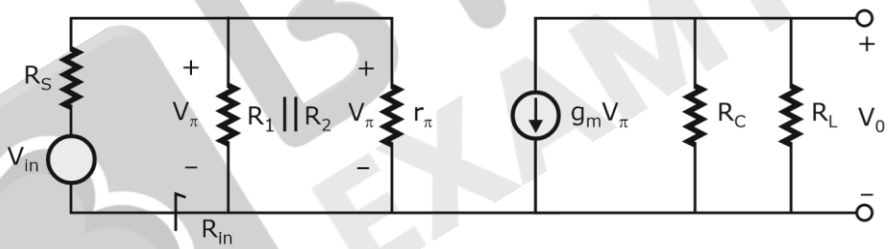

$$A_V = \frac{V_0}{V_\pi} = -\frac{g_m V_\pi (R_C || R_L)}{V_\pi}$$

$$A_V = -g_m (R_C || R_L)$$

$$A_{V_s} = \frac{V_0}{V_{in}} = \frac{V_0}{V_\pi} \times \frac{V_\pi}{V_{in}}$$

$$A_{V_s} = -\,g_m (R_C || R_L) \times \frac{R_{in}}{R_{in} + R_s}$$

$$R_{in} = R_1 || R_2 || r_\pi \cong 210\ \Omega.$$

R_C || R_L = 680//220 = 166.22 Ω

$$A_{V_s} = A_{V_{mid}} = -0.552 \times 166.22 \times \frac{210}{210+50}$$

$$\boxed{A_{V_{mid}} = -74.108}$$

$$\text{At } f = f_L\ |A_V| = \frac{|A_{V_{mid}}|}{\sqrt{2}} = 52.40$$

8.(c) (i) Derive the expression for stress in an element subjected to biaxial stress.

[10 Marks]

(ii) A simple tension member having an area of 100 mm^2 is subjected to load of 3000 kg. Strain of 1520 and –544 macrostrain are measured in the axial and transverse directions, respectively. Determine the value of Young's modulus and Poisson's ratio.

[10 Marks]

Sol. (i) Bi-axial stresses: Strain gauges are used in applications wherein the test piece is subjected to stress in more than one direction. If the test piece is on a free surface, as is usually the case, the condition is called bi-axial. A typical example of this case exists on the outer surface or shell, of a cylindrical vessel. The Hoop Stresses acting circumferentially tend to open up to seam in the

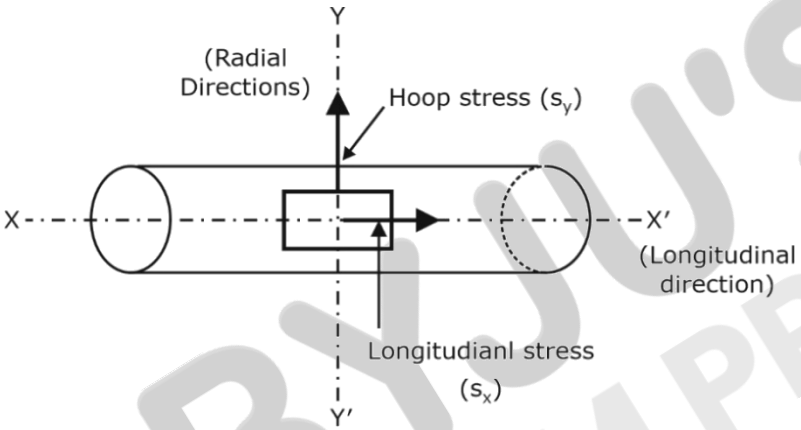

Fig. (a) A free surface subjected to bi-axial stresses.

longitudinal direction. Thus, there are longitudinal stresses which produce stresses in the radial direction.

This is shown in Fig. (a).

If we consider a general element as shown in Fig. (a) that is subjected to bi-axial tresses. Suppose stresses s_x, and s_y, are applied at the same time.

This is shown in Fig. (b).

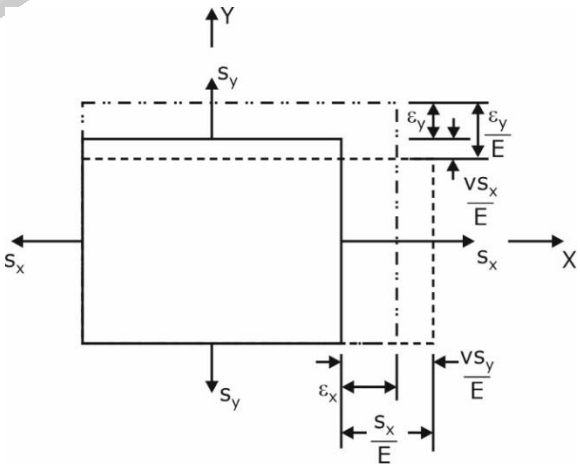

Fig (b)

If a stress s_x is applied in the longitudinal direction. This will produce a strain $\varepsilon_x = s_x/E$ in the longitudinal or X-direction.

At the same time, because of the Poisson's ratio effect, there will be a stress produced in the radial direction or along Y-axis. This produces a strain equal to $-vs_x/E$.

Suppose that a stress s_y is applied in the radial direction. This stress will produce a strain in the Y direction. Its value is s_y/E. It will also produce a strain equal to $-vs_y/E$ in the X or the longitudinal direction.

The net strains in the two directions are,

$$\varepsilon_x = \frac{1}{E}(s_x - vs_y) \qquad \text{... (1)}$$

and $$\varepsilon_y = \frac{1}{E}(s_y - vs_x) \qquad \text{... (2)}$$

∴ We get expression for the stresses as,

$$\varepsilon_x = \frac{E(\varepsilon_x + v\varepsilon_y)}{1-v^2} \quad \text{and} \quad \varepsilon_y = \frac{E(\varepsilon_y + v\varepsilon_x)}{1-v^2} \qquad \text{... (3) \& (4)}$$

Suppose it is required to determine the stresses in given orthogonal directions.

Equations. (3) and (4) show that in order to determine these stresses, it is necessary to know the modulus of elasticity E, Poisson's ratio v and also the strains ε_x and ε_y in the X and Y directions. Even if the stress is desired to be known in one direction it becomes necessary to measure strains in both the directions.

The problem becomes more complicated if a third stress acts in the third orthogonal direction.

If the stress in the Z direction be S_z. Then stress strain relationships are,

$$\varepsilon_x = \frac{1}{E}\left[s_x - v(s_y + s_z)\right]$$

$$\varepsilon_y = \frac{1}{E}\left[s_y - v(s_z + s_x)\right] \quad \text{And} \quad \varepsilon_x = \frac{1}{E}\left[s_z - v(s_x + s_y)\right] \qquad \text{... (4) \& (5)}$$

(ii) A = 100 mm^2

Load = 3000 kg,

F = mg = 3000×9.81 N = 29430 N

ε_{axial} = 1520*10^{-6} strain

$\varepsilon_{transverse}$ = −540 strain

$$\text{Poisson's ratio} = \frac{-(-540)}{1520\times10^{-6}} = 0.35$$

$$\text{Young's modulus for axial strain} = \frac{F/A}{\varepsilon_{axial}} = \frac{29430/(100\times10^{-6})}{1520\times10^{-6}}$$

$$= \frac{29430}{1520}\times10^{10} = 19.36\times10^{10}\ (N/m^2)$$

$$\text{Young's modulus for transverse strain} = \frac{F/A}{\varepsilon_{transverse}} = \frac{29430/(100\times10^{-6})}{-540\times10^{-6}} = -54.5\times10^{10}\ (N/m^2)$$

****

BYJU'S EXAM PREP | GATE

Outstanding performance by our students in GATE 2023

Congratulations to our toppers

13 Under AIR 10 | **62** Under AIR 50 | **107** Under AIR 100

RANK 01
SH GOWTHAM GUDIMELLA
Production & Industrial Engineering

RANK 03
KUSHAGRA
Mechanical Engineering

RANK 03
SARANSH GUPTA
Civil Engineering

RANK 04
VITTHAL AGRAWAL
Instrumentation Engineering

RANK 05
SARV VERMA
Electrical Engineering

RANK 05
DHRUV KATHROTIYA
Computer Science Engineering

RANK 05
HARSHIT
Production & Industrial Engineering

RANK 05
ARIJEET DE
Computer Science Engineering

RANK 06
BHARAT RAHEJA*
Electronics and Communication Engineering

RANK 08
PRASHANT LAVANIA
Electronics and Communication Engineering

RANK 09
ADITYA KALSHA
Electrical Engineering