Optical Sources & Detectors Study Notes for Instrumentation Engineering

In this article, you will find the Study Notes on Optical Sources & Detectors which will cover the topics such as Light Emitting Diode, Working of LED, Double Heterojunctions, Quantum Efficiency, Coupling of LED output to optical Fibre, LASER, Interaction of Radiation with Matter, Photodetectors, Population Inversion, Physical process in light detection, Performance parameters, Photodiode, LDR.

1. Light Emitting Diode

A light emitting diode (LED) is a device which converts electrical energy to light energy. LEDs are preferred light sources for short distance (local area) optical fibre network because they: are inexpensive, robust and have long life (the long life of an LED is primarily due to its being a cold device, i.e. its operating temperature being much lower than that of, say, an incandescent lamp), can be modulated (i.e. switched on and off) at high speeds (this property of an LED is also due to its being a cold device as it does not have to overcome thermal inertia), couple enough output power over a small area to couple to fibers (though the output spectrum is wider than other sources such as laser diodes).

Circuit Symbol

2. Working of LED

- An LED is essentially a p-n junction diode. It may be recalled that a p- type semiconductor is made by doping an intrinsic semiconductor with acceptor impurities while an n- type is made by doping with donor impurities. Ionization of carriers from the localized levels near the bottom of the conduction band provides electron carriers in the conduction band. Similarly, excitation of electrons from near the top of the valence band leaves holes in the valence band.
- As the concentration of holes is higher on the p-side, holes diffuse towards the right and enter the n-side combining with the majority carriers, viz. electrons. The n- side gets depleted of electrons and develops a net positive charge. In a like manner, electrons diffusing to the left create negative charges. Thus the region near the junction develops an electric field which stops further diffusion of charges. This region, which is free of carriers, is called depletion region or space charge layer.

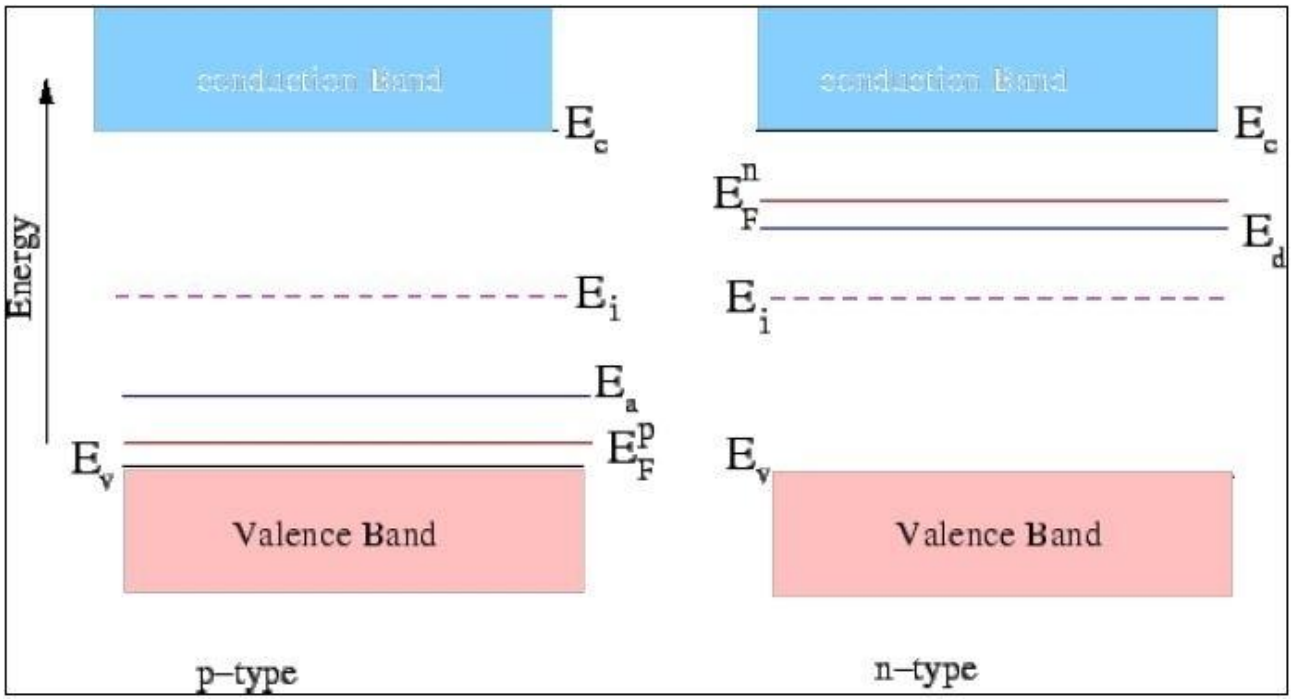

- If 'N' is the number of electrons injected into the depletion layer every second, the power output of the device is given by:

$$P = \eta N h\nu = \eta I h\nu / e$$

- where 'I' is the forward current and the electronic charge. If the energy of the photon is measured in electron volts, the current in milli-amperes, the above expression for power output becomes:

$$P \ (\text{in mW}) = \eta E_\gamma I$$

Example: A GaAs LED radiates at 900 nm. If the forward current in the LED is 20 mA, calculate the power output, assuming an internal quantum efficiency of 2%.

Solution: The energy of the photon (in eV) is

$$\frac{hc}{e\lambda} = \frac{6.62 \times 10^{34} \times 3 \times 10^{8}}{1.6 \times 10^{-19} \times 9 \times 10^{-7}} = 1.38$$

Thus the power output is $P = 0.02 \times 1.38 \times 20 = 0.55\text{mW}.$

3. Double Heterojunctions

One of the ways in which light output in LEDs is increased is to use hetero-junction rather than homojunction. A heterojunction is a junction of two materials of different band gaps. In the double heterostructure, a layer of p - type GaAs is sandwiched between a heavily doped n-type AlGaAs and a lightly doped p-type AlGaAs. The band gap of AlGaAs is 1.92 eV while that of GaAs is 1.42 eV. Thus electrons to the left of the GaAs layer find a potential barrier.

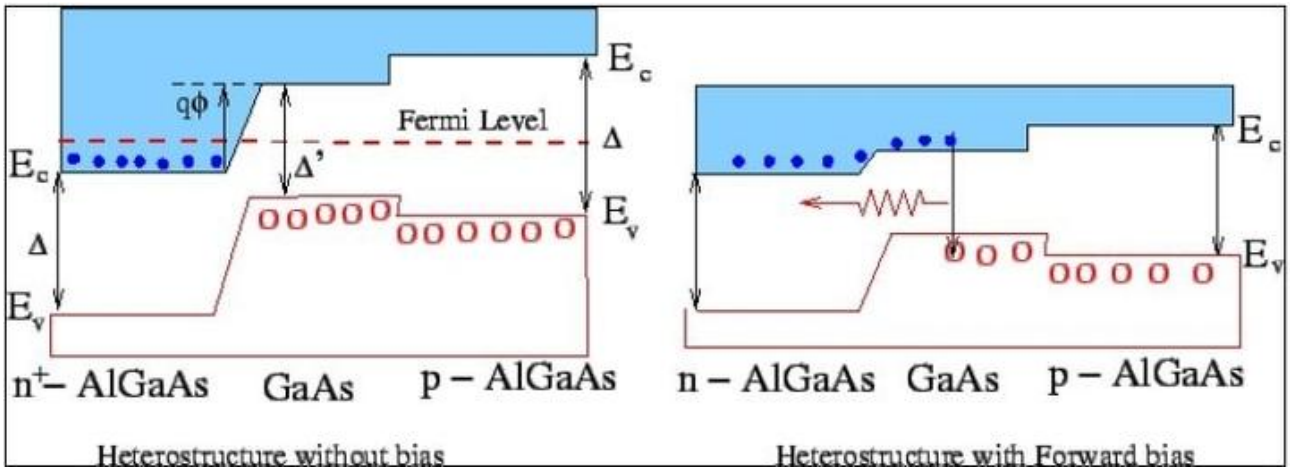

4. Quantum Efficiency

The efficiency of an LED refers to the percentage of power output in relation to input. There are three different efficiencies defined to measure the efficiency of conversion to light energy. We have already defined the internal quantum efficiency as a fraction of the electron hole pairs injected into the depletion layer which recombines to generate light. We define external quantum efficiency as the fraction of the number of photons which are generated within the semiconductor which is emitted outside.

- Whenever light falls at an interface between two media a fraction of the intensity is reflected back into the incident medium and a fraction transmitted. This is known as Fresnel reflection.
- The expression for external quantum efficiency is

$$\eta_e = \frac{1}{4n^2}\frac{4n}{(n+1)^2} = \frac{1}{n(n+1)^2}$$

5. Coupling of LED output to optical fibre

The surface emitting LED can be coupled to a fibre by etching a well in a planar LED structure and bringing the end of the fibre as close to the active layer as possible. This type of coupling is known as the Burrus device after its developer C. A. Burrus. The fibre is bonded to the well by an epoxy resin which provides better refractive index matching so that the fibre may capture as much light as possible.

Fiber Coupling Efficiency:

- The most basic method of coupling the optical output of a source into an optical fibre is known as butt coupling. This consists of placing the cleaved end of a fibre as close as possible to the output aperture of the source. The coupling is also known as end-fire coupling. An optical fibre is characterized by a numerical aperture. Numerical aperture is defined
  in terms of the maximum angle of incidence (the acceptance angle) that a ray may have at

the end face of a fibre so that the ray will travel along the core being totally reflected at the core - cladding boundary.

- If the acceptance angle is θ_{max}, then the numerical aperture is given by:

$$\text{N.A.} = \sin^2\theta_{max} = \frac{\sqrt{n_1^2 - n_2^2}}{n_0}$$

$$\simeq \sqrt{n_1^2 - n_2^2}$$

- where the refractive index of air. $n_0 \simeq 1$

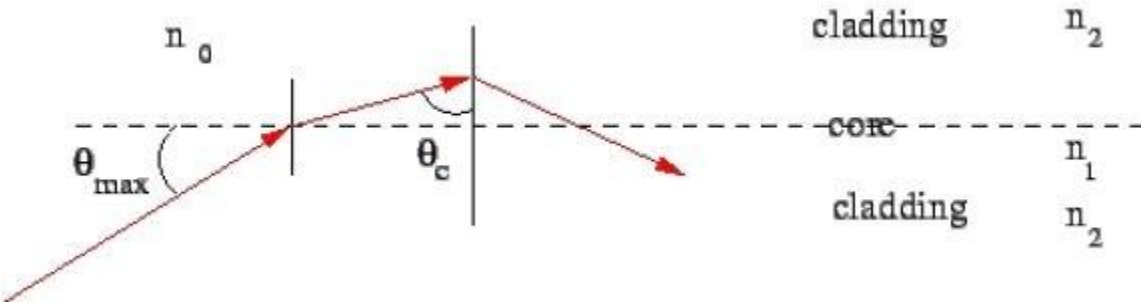

6. LASER

In 1958, Charles H. Townes and Arthur L. Schawlow showed that the effect of stimulated emission can be amplified to produce a practical source of light, which is coherent and can travel long distances without the appreciable spread of the beam width. Such a light source is called LASER, an acronym for Light Amplification by Stimulated Emission of Radiation. The principle behind such amplification is simple. Suppose we start with one photon which strikes an atom in an excited state and releases a photon, we would have two photons and an atom in the ground state. These two photons, in turn, may be incident on two more atoms and give rise to four photons, and so on.

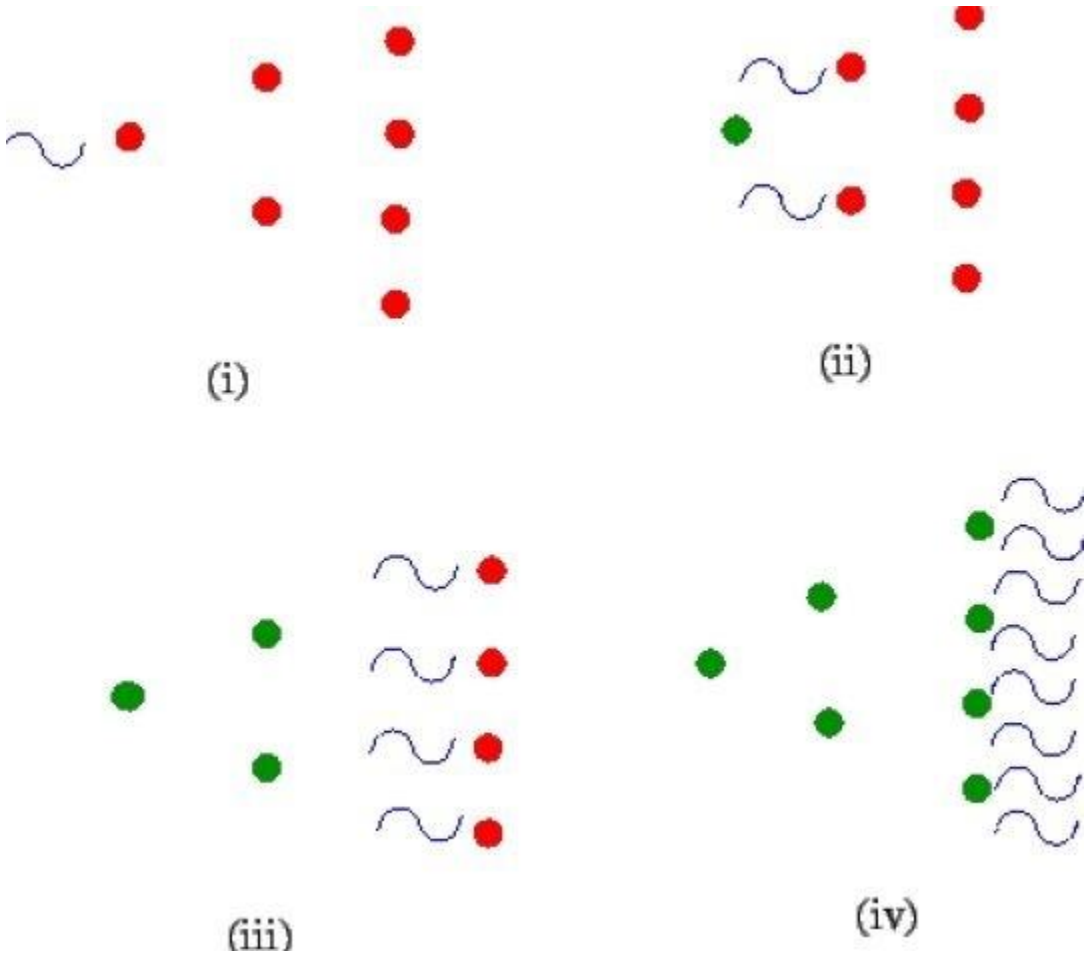

7. Interaction of Radiation with Matter

In order to have an insight into the principle of a laser, we need to understand the way radiation field interacts with matter.

Blackbody Radiation:

- Planck's formula gives the radiation of radiant intensity when electromagnetic radiation is confined to an isothermal cavity - known as the black body. Planck's formula for the radiant energy density is given by

$$u(\nu)d\nu = \frac{8\pi h\nu^3}{c^3}\frac{1}{e^{h\nu/kT}-1}d\nu$$

- Using Planck's law one can show that the total power emitted by a blackbody at a temperature 'T' is given by

$$U = \sigma T^4$$

- where σ is called Stefan's constant, which has a value

$$5.67 \times 10^{-8} \text{J-K}^{-4}/\text{m}^{2}$$

Boltzmann Statistics:

- If the atoms are in thermal equilibrium with the surrounding at a temperature T, the relative population in the two levels are given by Boltzmann distribution

$$\frac{N_2}{N_1} = e^{-h\nu/kT}$$

8. Population Inversion

- The population of excited states can be increased by absorption of radiation. However, the life time in the excited states being typical of the order of seconds, atoms which make transitions to the excited states fall back to the ground state soon thereafter.
- This is also indicated by the ratios of the Einstein coefficients. It is, therefore, not possible to keep the population in the excited states higher than that in the ground state.
- The basic principle involved in the operation of the laser is population inversion, a situation in which the population of the excited state is kept higher than that of the ground state.
- When, i.e., the population in the upper level is less than that in the lower level, the number of transitions from the lower to the upper level with the absorption of radiation is more than that with emission and hence the radiation is attenuated. If, on the other hand, emissions are more than absorption and the radiation is amplified as it passes through the material.

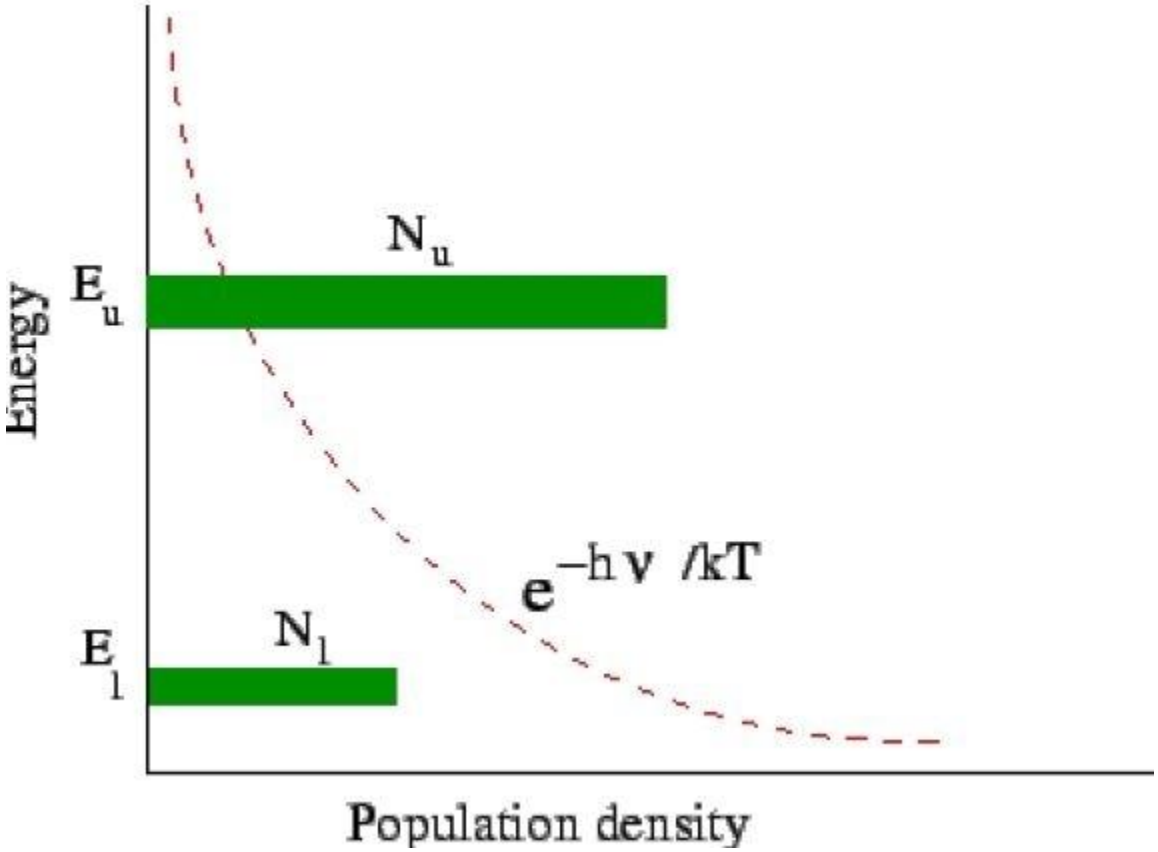

9. Photodetectors

A photodetector is a device which absorbs light and converts the optical energy to measurable electric current. Detectors are classified as

- Thermal detectors: When light falls on the device, it raises its temperature, which, in turn, changes the electrical properties of the device material, like its electrical conductivity. Examples of thermal detectors are thermopile (which is a series of thermocouples), pyroelectric detector etc.
- Photon detectors: Photon detectors work on the principle of conversion of photons to electrons. Unlike the thermal detectors, such detectors are based on the rate of absorption of photons rather than on the rate of energy absorption. However, a device may absorb photons only if the energy of incident photons is above a certain minimum threshold. Photon detectors, in terms of the technology, could be based on
    - Vacuum tubes - e.g. photomultipliers.
    - Semiconductors - e.g. photodiodes.
- For optical fibre applications, semiconductor devices are preferred because of their small size, good responsivity and high speed.

10. Physical Processes in Light Detection

Detection of radiation is essentially a process of its interaction with matter. Some of the prominent processes are

Photoconductivity:

- A consequence of small band gap (Δ) in semiconductors is that it is possible to generate additional carriers by illuminating a sample of the semiconductor by a light of frequency greater than Δ/h. This leads to an increased conductivity in the sample and the phenomenon is known as intrinsics photoconductivity.
- If E_i is the impurity ionization energy, the radiation frequency for extrinsic photoconductivity should be at least E_i/h.

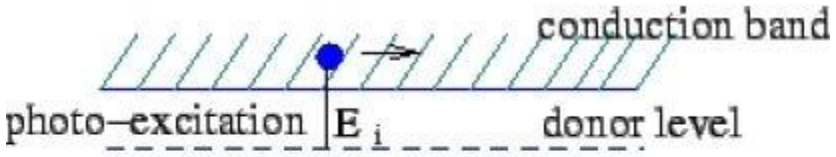

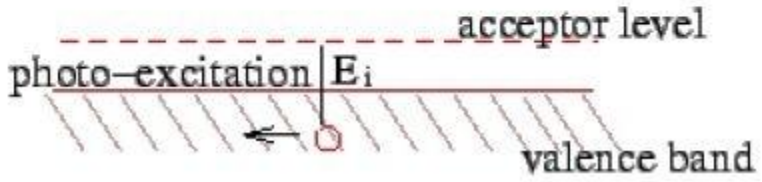

- If we define ηas the quantum efficiency, i.e. the fraction of absorbed photons that produce electron-hole pairs, the number of pairs produced per unit time is given by

$$\Delta n = \Delta p = \frac{\eta \alpha I}{h\nu}$$

Photovoltaic Effect:

- Photovoltaic effect can occur in a material which has a space charge layer, e.g. in a p-n junction. A photon of sufficient energy can be absorbed by the detector material to excite an electron from the valence band to the conduction band. The excited electron may be observed through its contribution to the current. A photovoltaic detector can be operated without application of a bias voltage.

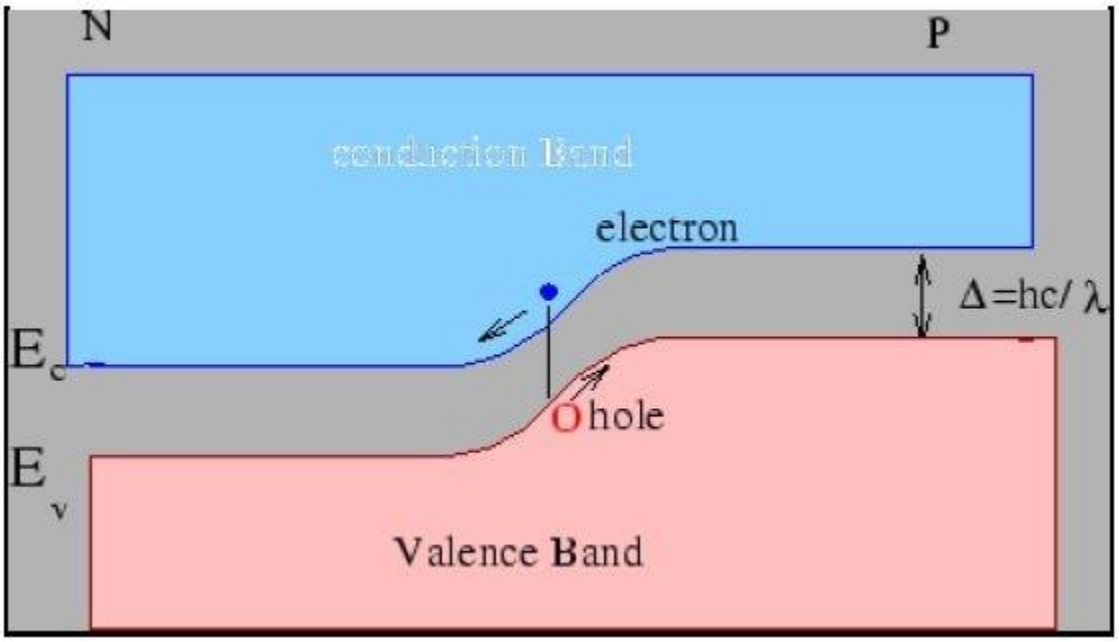

Photoemissive Process:

In a photoemissive process (also known as external photo effect) incident radiation causes electron emission from photocathode which is to be collected by an anode. Photoemissive detectors have an advantage over other detectors as they have faster speed, higher gain and low noise. However, their spectral range is somewhat limited as the incident photon must have sufficient energy to eject electrons from the photocathode. Photoemissive detectors are, therefore, natural choices in the ultraviolet range.

11. Performance Parameters

Responsivity: Responsivity of a detector is given as the ratio of the generated photocurrent (I) to the amount of optical power (P_0) incident on the detector. The unit of responsivity is amperes/watt.

$$\mathcal{R} = \frac{I}{P_0}$$

Quantum Efficiency: A detector is not capable of collecting all the photons and convert them to electron-hole pairs. The number of electrons produced per incident photon is defined as the quantum efficiency, which is usually expressed as a percentage.

$$\eta = \frac{\text{No. of electrons produced}}{\text{No. of incident photons}} (\times 100\%)$$

$$\eta = \frac{I/q}{P_0/h\nu}$$

$$\mathcal{R} = \frac{I}{P_0} = \frac{q\eta}{h\nu} = \frac{q\eta}{hc}\lambda$$

Spectral Response: The spectral response of a detector is given by the manner in which the output signal of the detector varies with the change in the wavelength of the incident radiation.

Noise Equivalent Power: Source of noise in a detector is thermal fluctuation. Charged particles are always in a state of motion. Even when no radiation is incident on a device, a background current, whose magnitude could be in nano-amperes or pico-amperes, is generated. This is known as dark current. In order that a detector may be able to differentiate between such random noise and an incoming signal, the power of the signal must be greater than the noise signal. In a detector design, one defines signal to noise ratio (SNR) as

$$\text{SNR} = \frac{\text{signal power}}{\text{noise power}}$$

Detectivity and Dee Star: Both these terms are frequently used interchangeably, though some definitions make a difference between the two. D' is essentially the inverse of NEP normalized to the unit area of the detector.

$$D^* = \frac{\sqrt{A}}{\text{NEP}}$$

12. Photodiode

- The photo conductors which are junction type, are photo-diodes or phototransistors where in one or more p-n junctions are used under reverse bias. Electron hole pairs resulting from photons incident on the p-n junction add to the minority carriers due to the reverse bias.

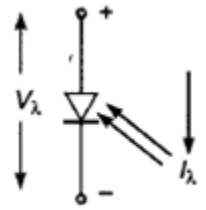

Symbol of photo-diode

Note: Silicon and germanium photo sensors have their peak spectral response in the infrared region, with their response in the visible only approximately 40% of maximum.

- The inherent current gain of a transistor provides the photo transistor with a high current gain in the region of 1 mA/mW/cm2.
- By adding a second conventional transistor, a photo Darlington amplifier results, with even higher sensitivity.

- Photodiodes and phototransistors may be operated as switching devices in light-operated relays, shaft encoders, paper tape readers, brush less DC motors, etc.

Variations of the basic p-n photo-diode are

- PIN photodiode (Ultrafast response),
- Avalanche photodiode (Higher current sensitivity and fast response),
- Photodiode (Inexpensive higher current sensitivity but slower response)

13. Light Dependent Resistor (LDR)

- LDRs (Light Dependent Resistors) are a very useful tool in light/dark circuits. An LDRs can have a variety of resistance and functions. For example, it can be used to turn on a light when the LDR is in darkness or to turn off a light when the LDR is in the light. It can also work the other way around so when the LDR is in the light it turns on the circuit and when it's in darkness the resistance increases and disrupts the circuit.

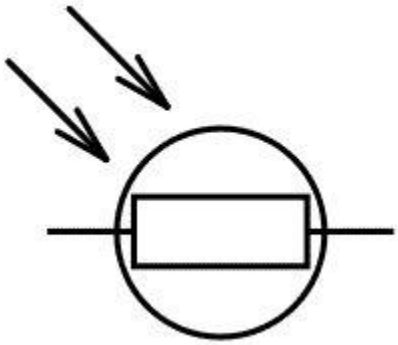

- Two cadmium sulfide(CDs) photoconductive cells with spectral responses similar to that of the human eye. The cell resistance falls with increasing light intensity. Applications include smoke detection, automatic lighting control, batch counting and burglar alarm systems.

Working of LDR:

- The way an LDR works is that they are made of many semi-conductive materials with high resistance. The reason they have a high resistance is that there are very few electrons that are free and able to move because they are held in a crystal lattice and are unable to move. When light falls on the semi conductive material it absorbs the light photons and the energy is transferred to the electrons, which allows them to break free from the crystal lattice and conduct electricity and lower the resistance of the LDR.

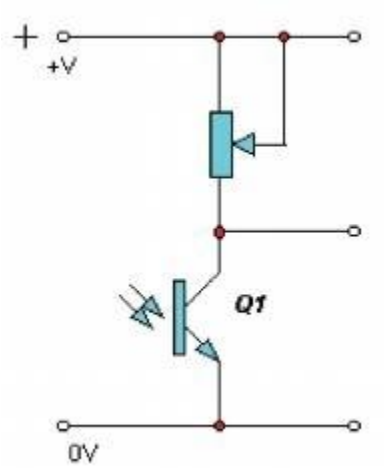

Characteristics of LDR:

- LDR's are light dependent devices whose resistance is decreased when light falls on them and that is increased in the dark. When a light dependent resistor is kept in dark, its resistance is very high. This resistance is called as dark resistance.

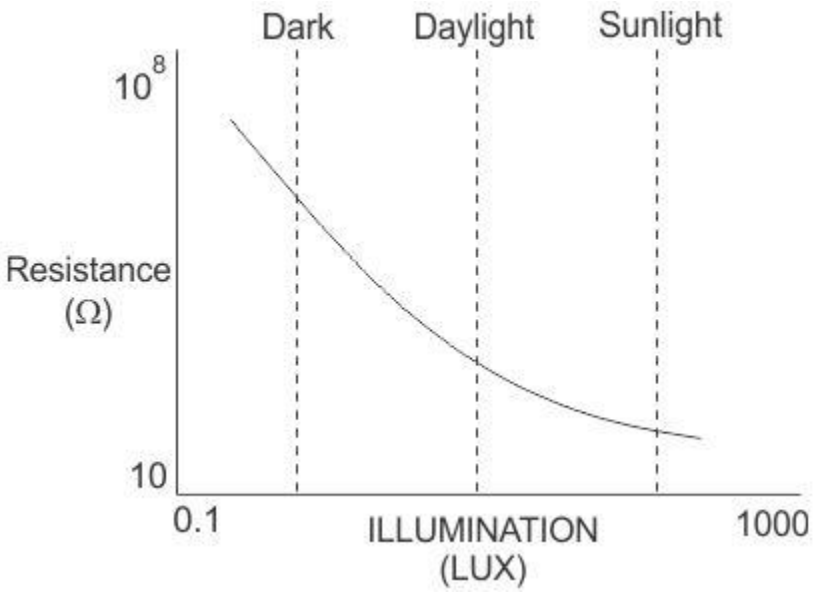

- Photocells or LDR's are nonlinear devices. Their sensitivity varies with the wavelength of light incident on them. Some photocells might not at all respond to a certain range of wavelengths. Based on the material used different cells have different spectral response curves.

Thanks!

BYJU'S Exam Prep - The Most Comprehensive App!