BYJU'S EXAM PREP

Electrical Engineering

Electrical and Electronic Measurements

SHORT NOTES

IMPORTANT FORMULAS TO REMEMBER

Chapter-1
Error Analysis

Measurement is a process by which one can convert physical parameters to meaningful numbers. The measuring process is one in which the property of an object or system under consideration is compared to an accepted standard unit, a standard defined for that particular property.

Static Characteristics

1. **Accuracy**

   It is the closeness with which an instrument reading approaches the true value of the measured quantity.

2. **Precision**

   It is a measure of the reproducibility of the measurements. It is a measure of the degree of agreement within a group of measurements.

Remember:

- Precision is not the guarantee of accuracy.
- An instrument with a more significant figure has more precision.

3. **Sensitivity**

   It is the ratio of the magnitude of output signal to the magnitude of input signal applied to the instrument.

$$\text{Sensitivity} = \frac{\text{Output}}{\text{Input}}$$

Note:

- An instrument requires a high degree of sensitivity

$$\text{Sensitivity} \propto \frac{1}{\text{Deflection factor}}$$

4. **Resolution**

   The smallest change in input which can be detected with certainty by an instrument is its resolution.

5. **Linearity**

   The output is linearly proportional to the input. For a linear instrument, the sensitivity is constant for the entire instrument range. Linearity is the most important parameter compared to all other parameters.

Remember:

- Linearity is more important than sensitivity.
- Accuracy is more important than resolution.

6. Dead Zone

It is the largest change in input quantity for which there is no response from the instrument.

7. Dead time

Time required by an instrument to begin to respond to the change in a measurand.

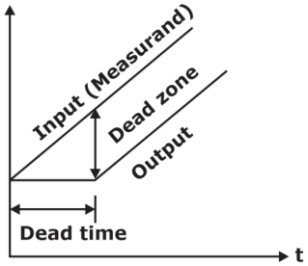

8. Range and Span

The difference between the maximum and the minimum values of the scale is called range. The maximum value of the scale is called span.

Errors

Error= Measured value – True value = Accuracy

- Static Error

$\delta A = A_m - A_t$

Where,

A_m = Measured value of a quantity or Actual value

A_t = True value of a quantity or Nominal value

Relative static error

$$\epsilon_r = \frac{\delta A}{A_t}$$

Static correction

$$\delta C = A_t - A_m = -\delta A$$

Static Sensitivity

$$\text{Static sensitivity} = \frac{\Delta q_0}{\Delta q_i}$$

Where, Δq0 = Infinitesimal change in output, Δqi = Infinitesimal change in input

Non-linearity (N.L)

$$\text{N.L.} = \frac{(\text{Max. deviation of output from the idealized straight line})}{\text{Full scale deflection}} \times 100$$

$$\text{Error at desired value} = \frac{\text{Full scale value} \times \text{Error at full scale}}{\text{Desired value}}$$

Combination of Quantities with Limiting Errors.Sum or Difference of Two or More than Two Quantities

Let $X = \pm X_1 \pm X_2 \pm X_3 \pm X_4$

Where,

$\pm\ \delta X_1$ = Relative increment in quantity X_1

$\pm\ \delta X_2$ = Relative increment in quantity X_2

$\pm\ \delta X$ = Relative increment in X

$\frac{\delta X_1}{X_1}$ = Relative limiting error in quantity X_1

$\frac{\delta X_2}{X_2}$ = Relative limiting error in quantity X_2

$\frac{\delta X}{X}$ = Relative limiting error in X

Product or Quotient of More than two Quantities

Let $X = X_1 X_2 X_3$ or $X = \frac{X_1}{X_2 X_3}$ or $X = \frac{1}{X_1 X_2 X_3}$

$$\frac{\delta X}{X} = \pm\left(\frac{\delta X_1}{X_1} + \frac{\delta X_2}{X_2} + \frac{\delta X_3}{X_3}\right)$$

Composite Factors

Let $X = X_1^n . X_2^m$

$$\frac{\delta X}{X} = \pm\left(n\frac{\delta X_1}{X_1} + m\frac{\delta X_2}{X_2}\right)$$

Arithmetic Mean

$$\bar{X} = \frac{\Sigma X}{n} = \frac{X_1 + X_2 + \ldots + X_n}{n}$$

where, $X_1, X_2, \ldots, X_n$ = Readings or samples, n = Number of readings

Deviation

$$d_n = x_n - \bar{X}$$

Note: Algebraic sum of deviation is zero.

Average deviation, $\bar{D} = \frac{\Sigma |d|}{n} = \frac{|d_1| + |d_2| + \ldots |d_n|}{n}$

Standard deviation

for n > 20, $S.D. = \sigma = \sqrt{\frac{\Sigma d^2}{n}} = \sqrt{\frac{d_1^2 + d_2^2 + \ldots + d_n^2}{n}}$

For n < 20 , $S.D. = s = \sqrt{\frac{\Sigma d^2}{n-1}}$

Variance

for n > 20, $v = \sigma^2 = \frac{\Sigma d^2}{n}$

For n < 20, $v = s^2 = \frac{\Sigma d^2}{n-1}$

Normal or Gaussian Curve of Errors

1. For Infinite Numbers of reading

$$y = \frac{1}{\sigma\sqrt{2\pi}} \exp\left(-x^2 / 2\sigma^2\right)$$

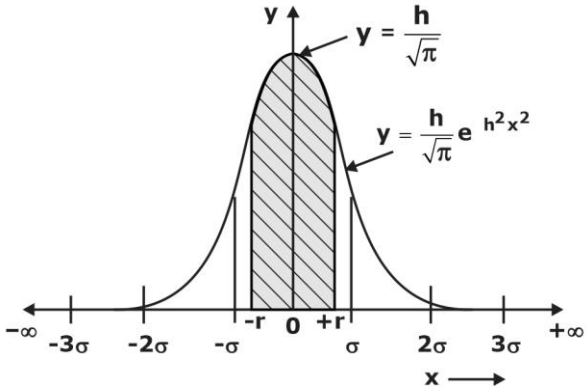

Where x = magnitude of deviation from mean, y = number of reading at any deviation x, (the probability of occurrence of deviation x)

σ = standard deviation

Precision Index

$$h = \frac{1}{\sigma\sqrt{2}}$$

Probable error (P.E.)

$$r = \frac{0.4769}{h}$$

Average deviation

$$D = \frac{r}{0.8453} = \frac{1}{\pi h^2}$$

Standard deviation

$$\sigma = \frac{r}{0.8745} = \frac{1}{h\sqrt{2}}$$

P.E. = r=0.8453 $\bar{D}$=0.6745σ

2. For Finite Numbers of Reading

For n > 20, P.E. = $r = 0.6745\sqrt{\frac{\Sigma |d|^2}{n}}$

For n <20, P.E. = $r = 0.6745\sqrt{\frac{\Sigma |d|^2}{n-1}}$

The standard deviation of the mean, $\sigma_m = \frac{\sigma}{\sqrt{n}}$

The standard deviation of standard deviation, $\sigma_\sigma = \frac{\sigma_m}{\sqrt{2}}$

The variance of combination of components

Let x = f(X_1, X_2,……. X_n)

$$V_x = \left(\frac{\partial X}{\partial x_1}\right)^2 V_{x_1} + \left(\frac{\partial X}{\partial X_2}\right)^2 V_{x_2} + ... + \left(\frac{\partial x}{\partial x_n}\right)^2 V_{x_n} \text{ where,}$$

$V_{x_1}, V_{x_2}, ...V_n$ = variance of $x_1, x_2, ...x_n$

Standard Deviation of Combination of Components

Let x = f(X1, X2, ……, Xn)

$$\sigma_x = \left(\frac{\partial x}{\partial x_1}\right)^2 \sigma_{x_1}^2 + \left(\frac{\partial X}{\partial x_2}\right)^2 \sigma_{x_2}^2 + ... \left(\frac{\partial X}{\partial x_3}\right)^2 \sigma_{x_n}^2$$

where , $\sigma_{x_1}, \sigma_{x_2}, ..., \sigma_{x_n}$ = Standard deviation of X1, X2, ……, Xn

Probable Error of Combination of Components

Let X = f(X_1, X_2, …., X_n)

$$r_x = \sqrt{\left(\frac{\partial x}{\partial x_1}\right)^2 r_{x_1}^2 + \left(\frac{\partial x}{\partial x_2}\right)^2 r_{x_2}^2 + ... \left(\frac{\partial x}{\partial x_n}\right)^2 r_{x_n}^2}$$

Where r_{x_1}, r_{x_1}……., r_{x_n} = Probable error of

X_1, X_2,….., X_n

Uncertainty of Combination of Components

Let X = f(X_1, X_2, …, X_n)

$$W_x = \sqrt{\left(\frac{\partial X}{\delta x_1}\right)^2 w_{x_1}^2 + \left(\frac{\partial X}{\partial x_2}\right)^2 w_{x_2}^2 + ... \left(\frac{\partial X}{\partial x_n}\right)^2 w_{x_n}^2}$$

Where $w_{x_1}, w_{x_2}, ..., w_{x_n}$ = Uncertainties of X_1, X_2, …, X_n

Chapter-2

Measurement of Current & Voltage

D'Arsonval Galvanometer

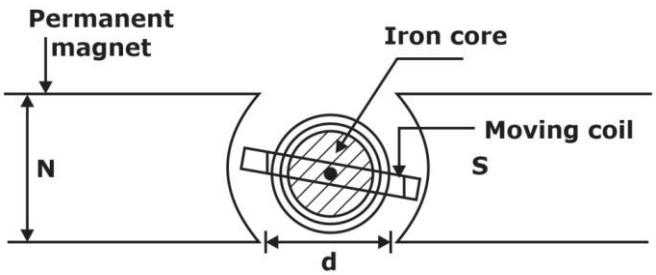

Deflecting torque

T_d = BINA = GI

Where,

B = Flux density in air gap in Wb/m^2

I = current though moving coil in Ampere

N= Number of turns in coil

A = l.d = Area of coil in m^2

l, d = Length of vertical and horizontal side (width) of coil respectively in m

G = Displacement constant of galvanometer

Controlling torque

$T_c = K\theta_f$

Where,

K = Spring constant of suspension; Nm/rad

θ_f = Final steady deflection of moving coil;

Final steady deflection

$$\theta_f = \left(\frac{NBA}{K}\right) i = \left(\frac{G}{K}\right) i$$

Dynamic behaviour of Torques in Galvanometers

Inertia torque, $T_j = J\frac{d^2\theta}{dt^2}$

Where J= moment of inertia of the moving system about the axis of rotation; kg-m^2,

θ = deflection at any time t; radian

Damping torque, $T_D = D\frac{d\theta}{dt}$

Where, D = damping constant

Controlling torque, $T_c = K\theta$ Where, K = control constant

Deflecting Torque, T_d = GI

Equation of motion, $T_j + T_D + T_C = Td$

$$J\frac{d^2\theta}{dt^2}+\frac{Dd\theta}{dt}+K\theta=GI$$

Note:

If $D^2 < 4$ KJ, galvanometer is under-damped.

If $D^2 = 4$ KJ, galvanometer is critically damped.

If $D^2 > 4$ KJ, galvanometer is over-damped.

The total resistance of galvanometer circuit for critical damping, $R=\frac{G^2}{2\sqrt{KJ}}$

External series resistance is required for critical damping, $R_e=R-R_g=\frac{G^2}{2\sqrt{KJ}}-R_g$

Where R_g = Resistance of galvanometer

Sensitivity

Current sensitivity

$$S_i=\frac{\theta_f}{i}=\frac{G}{k}\text{ rad/A}=\frac{d}{1\times10^6}\text{ scale divisions / }\mu\text{A}=\frac{2000G}{K\times10^6}\text{ mm / }\mu\text{A}$$

Voltage sensitivity

$$S_i=\frac{d}{iR_g\times10^6}\text{ scale division / }\mu\text{V}$$

Mega ohm sensitivity

$$S_o=\frac{d}{i\times10^{-6}}\text{ M}\Omega\text{ / scale division}$$

Remember:

The sensitive galvanometer produces a large deflection for a small current.

Classification of Analog Meters

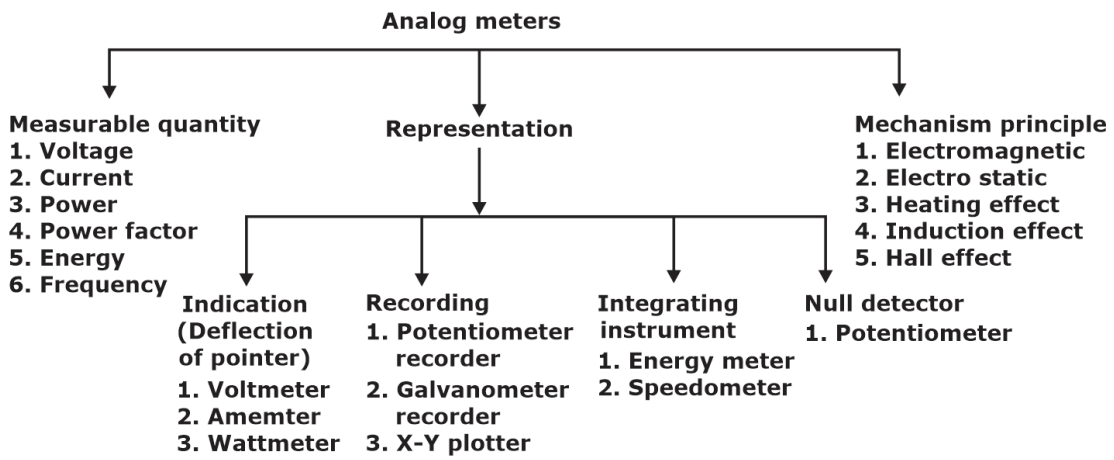

Torque in Analog Meter

1. Deflecting Torque (T_D) is proportional to quantity under measurement. This torque deflects the pointer away from the initial or zero position.

$T_D \propto$ measurable quantity

2. Controlling Torque (T_C)

The controlling torque is opposite to deflecting torque. When deflecting torque equal to controlling torque, the pointer comes to the final steady state position.

At equilibrium, $T_C = T_D$

Note :

Control torque is also used to bring the pointer to zero from the initial position if there is no deflecting torque.

Except in PMMC, in all other instruments, if the control spring fails or is broken, the pointer moves to the maximum scale position.

Control torque is provided by

(i) Spring control, (ii) Gravity control

3. Damping Torque

It is used to damp out oscillation at the final steady state position. The time response of the instrument depends on damping torque.

Damping torque provided by:

(i) Air friction damping; Used where low magnetic fields are produced.

(ii) Fluid friction damping; Used where deflecting torque is minimum.

(iii) Eddy current damping; Used where permanent magnet produces the required deflecting torque.

Error in Analog Meters

1. Frictional error

To reduce the frictional error, the torque to weight ratio of the instrument should be high.

2. Temperature error

Due to temperature change, change in resistance of meters and shunts and series multiplier occurs. To reduce this effect, resistances are made up of manganin material.

3. Frequency error

Due to change in frequency, error is produced in instrument because change in frequency causes a change in reactance. To reduce this error, a capacitance is used in case of voltmeter and for ammeter, the time constant and shunt impedance are maintained at same value.

Permanent Magnet Moving Coil (PMMC)

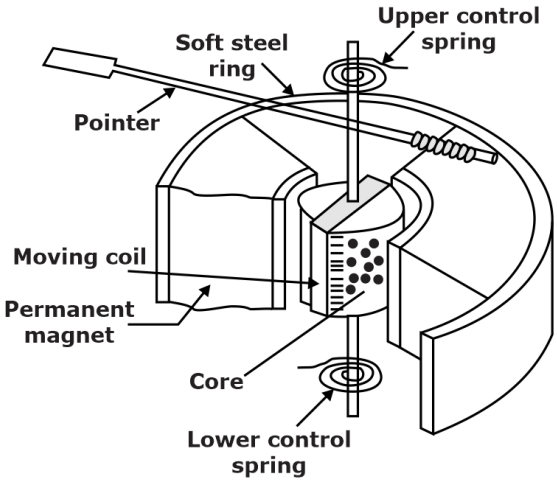

Deflection torque

$T_D = nBAI$, $T_D = GI$,

Where, G = nBA, n = Number of turns, B = Flux density, A = Area of core

I = Current to be measured

Final steady-state deflection, $\theta = \left(\frac{G}{k}\right) I$

Where, K = Spring constant

Note:

- PMMC instrument measures only DC or average values.
- Scale is linear.
- Spring is used for controlling torque.
- Damping torque provided by eddy current damping.
- It has a high torque to weight ratio, so accuracy and sensitivity are higher than other instruments.
- In direct measurement, the PMMC measures up to a current of 50 mA or a voltage of 100 mV without any external device.

Enhancement of Ammeters and Voltmeters

1. Ammeter Shunts

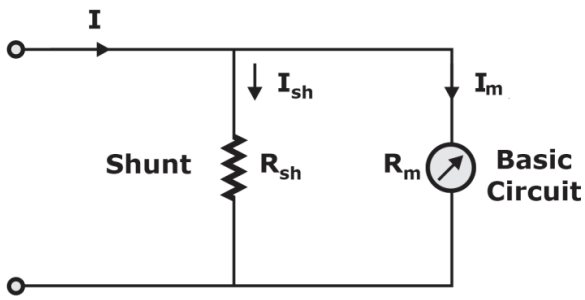

Basic Ammeter Circuit

$$I_{sh}R_{sh} = I_m R_m$$

$$I = \left(1 + \frac{R_m}{R_{sh}}\right) I_m$$

where, I = Current to be measured; $I_m = I_{fs}$ = Full scale deflection current; A

R_m = Internal resistance of meter; Ω, R_{sh} = Resistance of the shunt; Ω

Shunt resistance

$$R_{sh} = \frac{R_m}{m-1}$$

Where, $m = \frac{I}{I_m} = 1 + \frac{R_m}{R_{sh}}$, m = Multiplying factor for shunt

Note:

To reduce the temperature effect, swamp resistance made up of manganin is added in series with an ammeter.

2. Universal or Ayrton Shunt

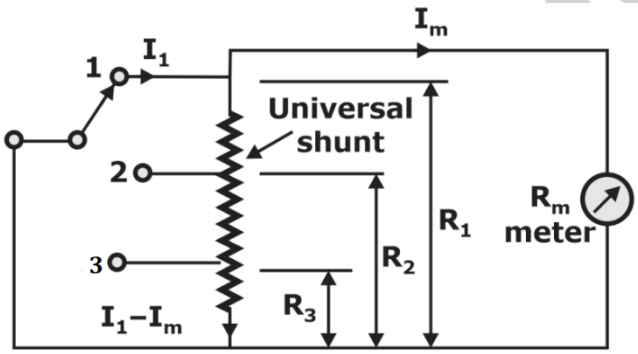

(Multi-range ammeter using universal shunt)

For switch at a position 1, $R_1 = \frac{R_m}{(m-1)}$

For switch at a position 2, $R_2 = \frac{(R_1 + R_m)}{m_2}$

For switch at a position 3, $R_3 = \frac{(R_1 + R_m)}{m_3}$

Where, $m_1 = \frac{I_1}{I_m}$, $m_2 = \frac{I_2}{m}$, $m_3 = \frac{I_3}{I_m}$

3. Voltmeter Multipliers

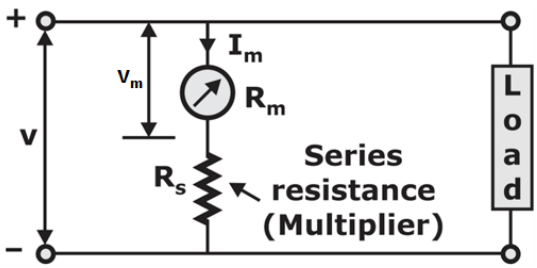

The multiplying factor for the multiplier, $m = \frac{V}{V_m} = 1 + \frac{R_s}{R_m}$

Resistance of multiplier, $R_s = (m-1)R_m$

Where, R_s = Multiplier resistance, R_m = Internal resistance of meter

4. Potential Divider Arrangement

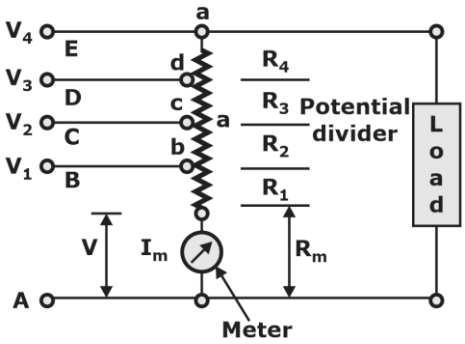

$R_1 = (m-1)R_m,\ R_2 = (m_2 - m_1)R_m,\ R_3 = (m_3 - m_2)R_m,\ R_4 = (m_4 - m_3)R_m$

Where, R_1 = Resistance between point a and b, R_2 = Resistance between point b and c

R_3 = Resistance between point a and d R_4 = Resistance between point d and e

Voltmeter Sensitivity (VS), $S_V = \frac{1}{I_{fs}} = \frac{R_s + R_m}{V}\ \Omega/V$

Remember:

To reduce loading effect, a voltmeter with higher value of sensitivity is preferred.

Moving Iron Instruments

Deflecting torque, $T_d = \frac{1}{2} I^2 \frac{dL}{d\theta}$, Deflection, $\theta = \frac{1}{2} \frac{I^2}{K} \frac{dL}{d\theta}$

Note:

- Moving iron instrument measure both A.C and D.C. quantities.
- In case of A.C, it measures RMS Value.
- Scale is nonlinear.
- Controlling torque is provided by spring, and air friction damping is used.
- Curve between $\frac{dL}{d\theta}$ and θ is a rectangular hyperbola.

Shunts for Moving Iron Instruments

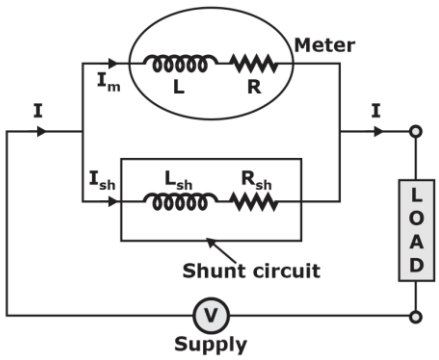

$$\frac{I_{sh}}{I_m} = \frac{R}{R_{sh}} \frac{\sqrt{1 + (\omega L / R)^2}}{\sqrt{1 + (\omega L_{sh} / R_{sh})^2}}$$

Multipliers for Moving Iron Instruments

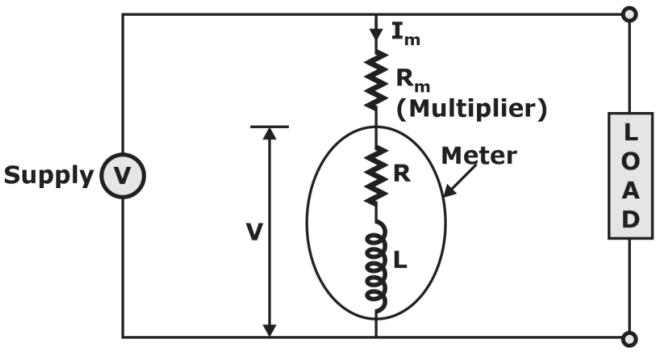

Voltage multiplying factor, $m = \frac{V}{v} = \frac{\sqrt{(R+R_m)^2 + \omega^2 L^2}}{\sqrt{R^2 + \omega^2 L^2}}$

Error in Moving Iron Instruments

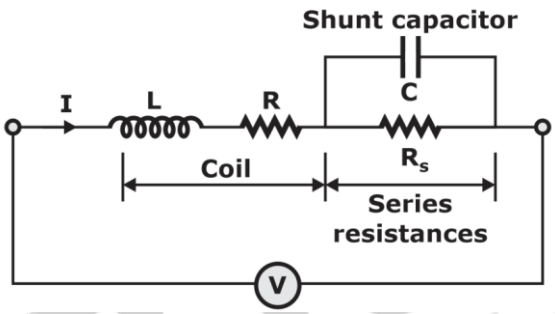

Shunt capacitance

$$C = 0.41 \frac{L}{R_s^2}$$

Eddy currents

When ω is small, $I'_e = \frac{\omega^2 M L_e I}{R_e^2}$

When ω is large, $I'_e = \frac{M L_e I}{R_e} = \text{constant}$

Where,

R_e, L_e = resistance and inductance of eddy current path

Note:

- Moving iron instrument is not suitable for measurement of current or voltage for frequency above 125 Hz because eddy current is constant at a higher frequency.
- If meter time constant is equal to the shunt time constant then ammeter is made independent of the input supply frequency.
- To reduce hysteresis error, the iron part of moving iron is made up of Nickel iron alloy.
- To reduce the external stray magnetic fields.

Average current through diode vacuum tube voltmeters

$$I_{av} = \frac{E_{av}}{2R} = \frac{E_{rms}}{2 \times 1.11 \times R} = 0.45\frac{E_{rms}}{R}$$

Where, E_{rms} = RMS value of applied voltage, E_{av} = Average value of applied voltage

R = Load resistance

Difference amplifier type of electronic voltmeter

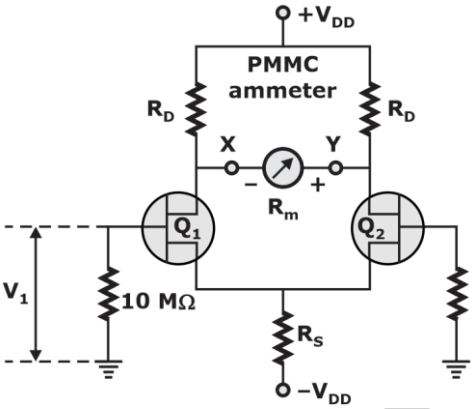

Thevenin's voltage across terminal X-Y

$$V_{Th} = g_m \left(\frac{r_d R_D}{r_d + R_D}\right) v_1$$

Thevenin's resistance looking into terminals X-Y

$$R_{Th} = \frac{2r_d R_D}{r_d + R_D}$$

Where, R_d = A.C. drain resistance in Ω, g_m = Transconductance in mho

Current through ammeter, $i = \frac{V_{Th}}{R_{Th} + R_m} = \frac{g_m r_d R_D / (r_d + R_D)}{2r_d R_D / (r_d + R_D) + R_m} . v_1$

Where, $R_D << r_d$, $i = \frac{g_m R_D}{2R_D + R_m} . v_1$

Chapter-3

Measurement of Power & Energy

Electrodynamometer

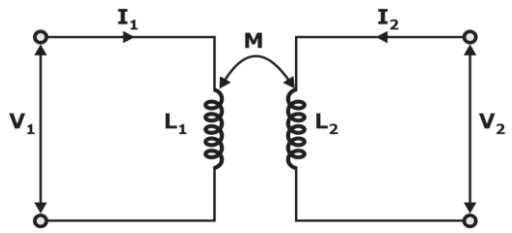

(a) If i_1 and i_2 are D.C current i.e. $i_1 = i_2 = I$, $T_d = I^2 \frac{dM}{d\theta}$ (Measure average value)

(b) If i_1 and i_2 are A.C current and no phase shift, $i_1 = i_2 = I$, $T_d = I^2 \frac{dM}{d\theta}$ (Measure RMS value)

(c) If $i_1 = I_{m1} \sin \omega t$ and $i_2 = i_{m2} \sin (\omega t - \phi)$, $T_d = I_1 I_2 \cos\phi \frac{dM}{d\theta}$ (Measure RMS value)

where, $I_1 = \frac{I_{m1}}{\sqrt{2}}$ and $I_2 = \frac{I_{m2}}{\sqrt{2}}$

Note:

- Electrodynamometer instrument is a transfer instrument
- It measures both A.C. and D.C
- Scale is nonlinear.
- Its sensitivity is lesser than PMMC and M.I. type instrument.

Ratiometer

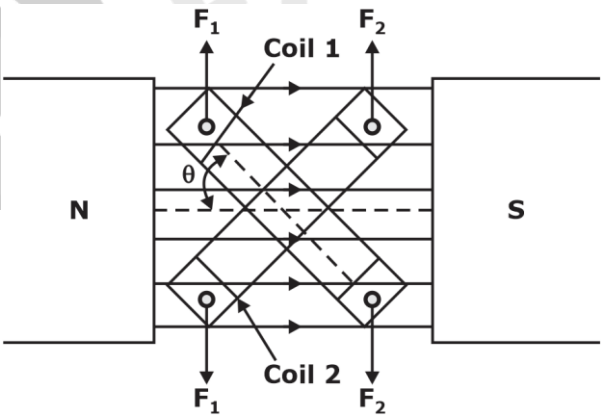

Deflecting torque acting on coil 1, $T_{d1} = N_1 B I_1 d_1 l_1 \cos\theta$

Deflecting torque acting on coil 2, $T_{d2} = N_2 B I_2 d_2 l_2 \cos\theta$

Where

I_1, I_2 = current in coil 1 and 2, N_1, N_2 = Number of turns in coil 1 and 2

l_1, l_2 = length of coil 1 and 2, d_1, d_2 = width of coil 1 and 2

B = flux density of magnetic field

Deflection at equilibrium, $\theta = k\left(\frac{I_1}{I_2}\right)$

Measurement of Power

1. D.C Circuits

Ammeter connected between load, and voltmeter

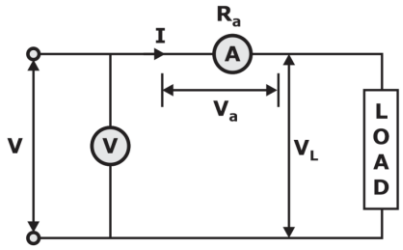

Power consumed by load :

$P = VI - I^2R_a$

Where, V= Voltage across voltmeter, I = Current though ammeter, R_a = Resistance of ammeter

A voltmeter connected between the load and ammeter

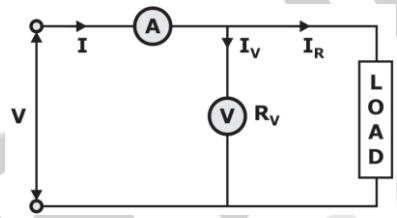

Power consumed by load :

$P = VI - \frac{V^2}{R_v}$

Where, V = Voltage across voltmeter, I = Current through ammeter,

RV = Resistance of ammeter

2. A.C. Circuits

Instantaneous power

$P = vi = V_m I_m \sin\omega t \sin(\omega t - \phi)$

Where $v = V_m \sin\omega t$, $i = I_m \sin(\omega t - \phi)$

Average power, $P = VI\cos\phi = \frac{V_m I_m}{2}\cos\phi$

Where V, I = RMS values of voltage and current, cosϕ = Power factor of the load

Let

$v = V_o + \sum_{n=1}^{m} V_n \sin(n\omega t + \theta_n)$ and $i = I_o \sum_{n=1}^{m} I_n \sin(n\omega t + \phi_n)$ then

$p_{avg} = V_o I_o + \frac{1}{2}\sum_{n=1}^{m} V_n I_n \cos[\theta_n - \phi_n]$

Remember:

Wattmeter reads average active power.

Electrodynamometer Wattmeter

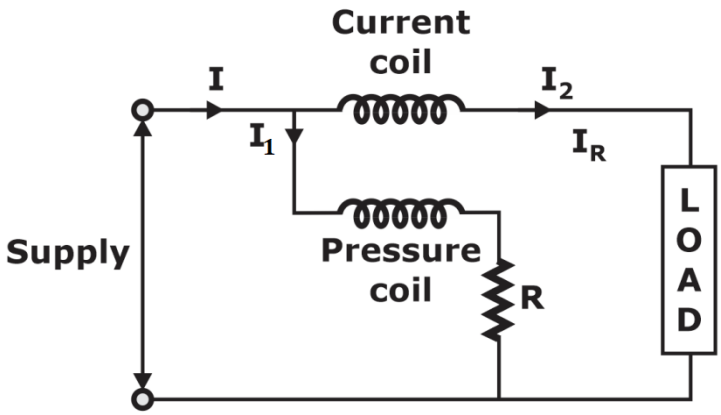

Instantaneous torque

$$T_i = i_1 i_2 \left(\frac{dM}{d\theta}\right)$$

where i_1, i_2 = instantaneous value of current in pressure and current coils

Deflecting torque

$$T_d = \frac{VI}{R_p} \cos\phi . \frac{dM}{d\theta}$$

Where R_p = resistance of pressure coil circuit

Controlling torque

$$T_c = K\theta$$

Where, K = spring constant, θ = final steady deflection

Deflection, $\theta = \left(K_1 \frac{dM}{d\theta}\right) P$

Where, P = Power being measured = Vl cosϕ, $K_1 = \frac{1}{R_p K}$

Note:

Scale is linear in terms of power as $\theta \propto P$

Errors in Electrodynamometer Wattmeter Correction factor (K)

The correction factor is multiplied by the actual wattmeter reading to get the true power.

For lagging power factor, $K = \frac{\cos\phi}{\cos\beta \cos(\phi - \beta)}$

For leading power factor, $K = \frac{\cos\phi}{\cos\beta \cos(\phi + \beta)}$

Where,

ϕ = Angle between current in the current coil and voltage of pressure coil

β = Angle between current and voltage of pressure coil

True power = Correction factor x actual wattmeter reading

For Very small β

Actual wattmeter reading = true power (1 + tan ϕ tan β)

Error = tan φ tan β × true power = VI sin ϕ tan β

%error = tan ϕ tan β × 100

True power = VI cos ϕ

Where, V = Voltage applied to pressure coil, I = Current in current coil

Power in Poly-Phase Systems

Blondel's Theorem

Suppose a network is supplied through n conductors. In that case, the total power is measured by summing the reading of n wattmeters so arranged that a current element of a wattmeter is in each line and the corresponding voltage element is connected between that line and a common point, if the common point is located on one of the lines, then the power may be measured by (n – 1) wattmeters.

Two wattmeter method

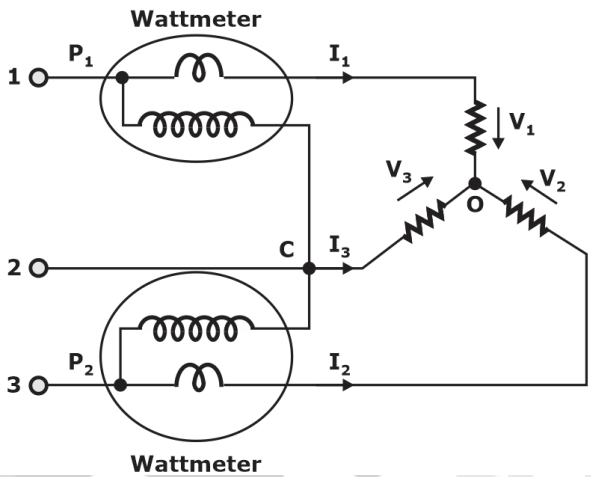

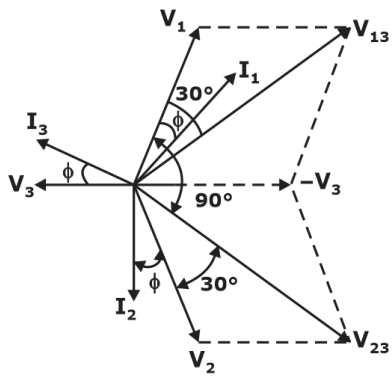

Reading of P_1 wattmeter, $P_1 = \sqrt{3}\ VI\cos(30^\circ - \varphi)$

Reading of P_2 wattmeter, $P_2 = \sqrt{3}\ VI\cos(30^\circ + \varphi)$

Total power consumed by load, $P = P_1 + P_2$

Power factor, $\cos\varphi = \cos\left[\tan^{-1}\left(\sqrt{3}\dfrac{P_1 - P_2}{P_1 + P_2}\right)\right]$

$$\tan\varphi = \sqrt{3}\frac{P_1 - P_2}{P_1 + P_2}$$

Where, V = Phase voltage, I = Phase current

φ = Angle between phase current and phase voltage

Reading of wattmeter at Different Power Factor

S.No.	φ	cos φ	P_1	P_2	$P=P_1 + P_2$	Comment
1.	0	1	$\frac{\sqrt{3}}{2} V_L I_L$	$\frac{\sqrt{3}}{2} V_L I_L$	$\sqrt{3}\ V_L I_L$	$P_1 = P_2$ (equal reading)
2.	30°	0.866	$V_L I_L$	$\frac{V_L I_L}{2}$	$1.5\ V_L I_L$	$P_1=2P_2$

3.	60°	0.5	$\frac{\sqrt{3}}{2} V_L I_L$	0	$\frac{\sqrt{3}}{2} V_L I_L$	$P_2=0$, $P_1=P$
4.	90°	0	$+\frac{V_L I_L}{2}$	$-\frac{V_L I_L}{2}$	0	$P_1 = -P_2$

Note:

When Wattmeter reading comes in negative, reverse either P.C. or C.C. terminal and take the reading of the negative wattmeter.

Measurement of Energy

For the measurement of energy, we use an energy meter. An energy meter is an integrating instrument that adds energy cumulatively over time.

$$\text{Energy} = \text{Power} \times \text{time} = \int_0^t P \,.\, dt \text{ kWhr}$$

Note:

An energy meter works on principle of induction.

- The meter which measures A.C. energy is called a watt-hour meter.
- The meter which measures D.C. energy is called an amp-hour meter.

Deflection torque, $T_D \propto P$

Breaking torque, $T_B \propto N$

Where, N = Speed of disc in rps

At balance, $T_d = T_B$

$$\int P \,.\, dt = K \int N . dt$$

$$\text{Energy} \propto \int N . dt$$

Energy meter constant (EMC)

$$\text{EMC} = \frac{\text{Number of revolution made by disc}}{\text{Energy recorded in kWhr.}}$$

Where P = Power in kW, T = Time in hrs.

Revolution of disc due, $\%\text{Creeping Error} = \frac{\text{creeping per hour}}{\text{Revolution of disc due to total load per hour}} \times 100$

Remember:

Potential coil of energy meter should be highly inductive so that it measures true energy.

Compensation in Energy meter

1. Lag compensation: Through lag coil or shading coil.

2. Low load or friction adjustment: By using shading loop.
3. Over friction or creeping: By providing holes or slots on rotating disc.
4. Overload compensation: By keeping saturable shunt magnet in series magnet or current coil.
5. Overvoltage compensation: By keeping saturable shunt magnet in shunt magnet.
6. Speed adjustment: By adjusting position of break magnet.

Remember:

Creeping error is always positive.

If either potential coil or current coil is wrongly connected then the disc rotates in opposite direction.

Chapter-4

Measurement of R, L & C (Resistors, Inductors, Capacitors)

Frequency Errors in Resistors

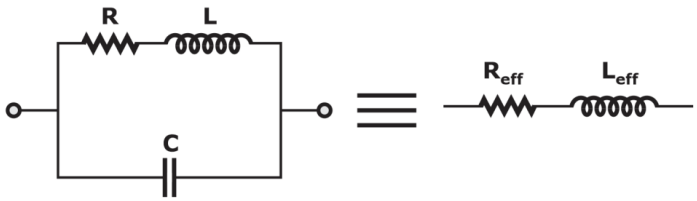

(Equivalent circuit of a resistor at low and medium frequencies)

Effective resistance

$$R_{eff} = \frac{R}{1+\omega^2 C\left(CR^2 - 2L\right)}$$

Effective inductance or residual inductance

$$L_{eff} = \frac{L - CR^2}{1+\omega^2 C\left(CR^2 - 2L\right)}$$

$$\tan\phi = \frac{X_{eff}}{R_{eff}} = \frac{\omega L_{eff}}{R_{eff}} = \frac{\omega\left(L - CR^2\right)}{R} = \omega\left(\frac{L}{R} - CR\right)$$

Where, φ = Phase deflection angle Time constant

Condition for resistance to remain independent of frequency, $CR^2 = 2L$

Condition for resistance to show no inductive effect, $CR^2 = L$

Effective resistance for zero effective inductance, $R_{eff} = \frac{R}{1-\omega^2 LC}$

Quality factor, $Q = \frac{\omega L}{R}$

Frequency Error in Inductors

Effective resistance, $R_{eff} = \frac{R}{\left(1-\omega^2 LC\right)}$

Effective inductance, $L_{eff} = L\left(1+\omega^2 LC\right)$

Capacitor

1. Parallel Representation

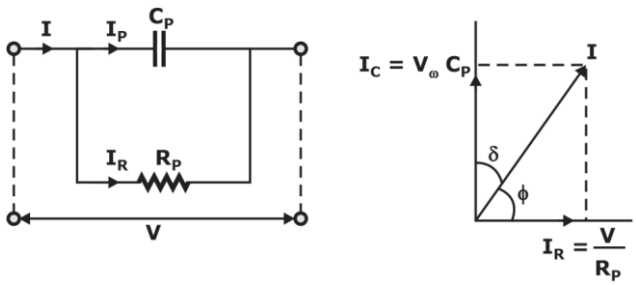

Dielectric loss, $P_L = \omega C_p V^2 \tan\delta$

Dissipation factor, $D = \tan\delta = \dfrac{1}{\omega C_p R_p}$

Where, δ = loss angle of the capacitor.

2. Series Representation

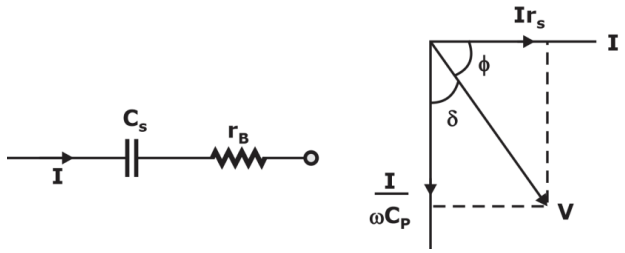

Dissipation factor, $P_L = \dfrac{I^2}{\omega C_s} \tan\delta$

Dissipation factor, $D = \tan\delta = \omega C_s r_s$

FREQUENCY Errors in Capacitors

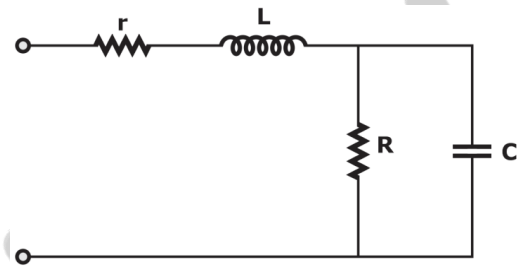

Equivalent circuit of a capacitor

Equivalent Circuit of a Capacitor

Effective capacitance, $C_{eff} = \dfrac{C}{1 - \omega^2 LC}$

1. For Medium Frequency

Effective capacitance, $C_{eff} = C(1 + \omega^2 LC)$

Effective series resistance, $R_{eff} = r + \dfrac{R}{1 + \omega^2 R^2 C^2}$

Where, r = resistance of load

Loss angle, $\tan\delta = \dfrac{1 - \omega^2 LC}{\omega r + \dfrac{1}{\omega CR}}$

2. For Low Frequency

Effective capacitance, $C_{eff} = C + \dfrac{1}{\omega^2 CR^2}$

Effective series resistance, $R_{eff} = \dfrac{R}{1 + \omega^2 C^2 R^2}$

Loss angle, $\tan\delta = \dfrac{1}{\omega CR}$

Classification of Resistance

1. Low resistance: All resistance of the order of 1 Ω and below.
   Example: Winding coils of electrical motors, generators and transformers.
2. Medium resistance: Resistances from 1 Ω upwards to about 0.1 MΩ.
   Example: Resistance of heaters, potentiometers.
3. High resistance: All resistances of the order of 0.1 MΩ and above.
   Example: Insulation of electrical cable and windings, insulation of motors, generators and transformers.

Measurement of Medium Resistance

The different methods employed are:

(i) Ammeter – voltmeter method
(ii) Wheatstone bridge method
(iii) Ohmmeter method
(iv) Substitution method

1. Ammeter Voltmeter Method

$$R_m = \frac{\text{Voltmeter reading}}{\text{Ammeter reading}} = \frac{V}{I}$$

Where R_m = measured value of resistance

(a) Circuit for higher resistance

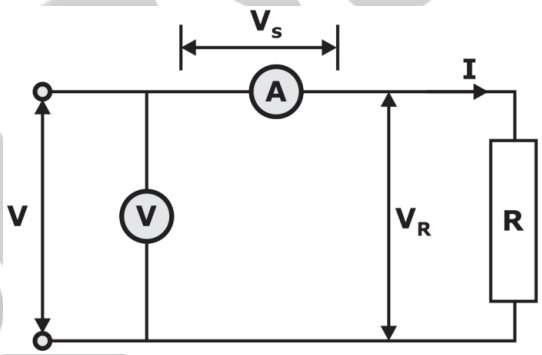

The true value of resistance, $R = R_{m1} - R_a$

$$R_m = R_{m1}\left(1 - \frac{R_a}{R_{m1}}\right)$$

Where, R_{m1} = Measured value of resistance, R_a = Resistance of ammeter

Relative error

$$\epsilon_r = \frac{R_{m_1} - R}{R} = \frac{R_a}{R}$$

To get minimum error, the test resistance should be more than the ammeter resistance so that this adjustment is suitable for measurement of high resistance.

(b) Circuit for lower resistance

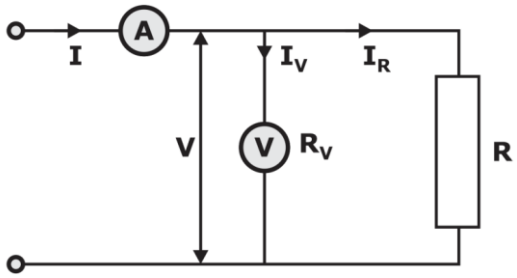

The true value of resistance

$$R = \frac{R_{m2}R_v}{R_v - R_{m2}}$$

Where, R_{m2} = Measured value of resistance, R_v = Resistance of voltmeter

For $R_v >> R_{m2}$

$$R = R_{m2}\left(1 - \frac{R_{m2}}{R_v}\right)$$

Relative error, $\epsilon_r = \frac{R_{m_2} - R}{R} = \frac{-R^2_{m2}}{R_V R}$ $\left[R_V >> R_{m_2}\right]$

Approximate relative error, $\epsilon = -\frac{R}{R_V}$ $\left[\text{for} R_{m_2} \approx R\right]$

Note:

Relative errors for the above two cases are equal when true value of resistance,

$R = \sqrt{R_a R_V}$

2. Wheatstone Bridge

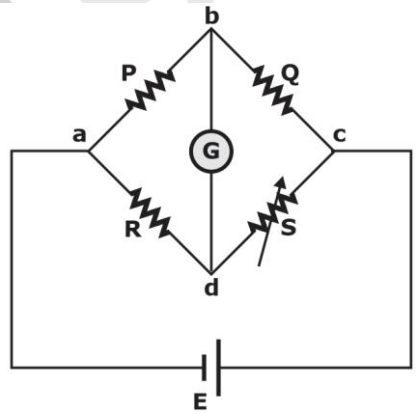

At Balance, $R = S\frac{P}{Q}$

Sensitivity of Wheatstone bridge, $S_B = \frac{\theta}{\Delta R / R} = \frac{S_v ESR}{(R+S)^2}$; $mm = \frac{S_v E}{\frac{P}{Q} + 2 + \frac{Q}{P}}$

Where,

S_v = Voltage sensitivity of galvanometer, mm/volt

E = Bridge voltage

P, Q = Branch resistances

θ = Deflection of galvanometer, mm

For a bridge with equal arms, $S_B = \frac{S_V E}{4}$

Note:

- For maximum bridge sensitivity

$$\frac{P}{Q} = \frac{R}{S} = 1$$

- Sensitivity of bridge is most important parameter as compared to accuracy, precision and resolution.

Equivalent circuit of Wheatstone bridge

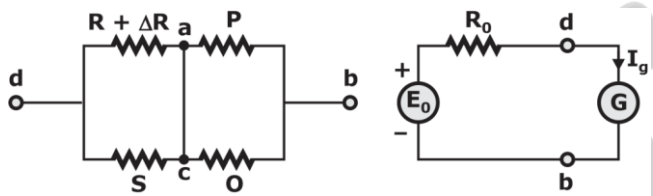

Galvanometer current, $I_g = \frac{E_0}{R_0 + G}$

Where,

E_0 = Thevenin's or open circuit voltage appearing between terminals b and d with galvanometer circuit open circuited.

G = Resistance of the galvanometer circuit

$$E_0 = E\left[\frac{R + \Delta R}{2R + \Delta R} - \frac{1}{2}\right] \approx E\left(\frac{\Delta R}{4R}\right) \text{ as DR << R}$$

ΔR = Change in resistance R

Thevenin equivalent resistance of bridge, $R_0 = \frac{RS}{R+S} + \frac{PQ}{P+Q}$

Galvanometer deflection, $\theta = \frac{S_V ES\Delta R}{(R+S)^2} = \frac{S_i ES\Delta R}{(R_0 + G)(R+S)^2}$

Where,

S_i = Current sensitivity of galvanometer Bridge sensitivity

$$S_B = \frac{\theta}{\Delta R / R} = \frac{S_i ESR}{(R_0 + G)(R+S)^2}$$

Current sensitivity

$$S_i = \frac{\theta}{I_g} \text{ ; mm/μA}$$

θ = Deflection in the galvanometer

I_g = Current in galvanometer voltage sensitivity

$$S_V = \frac{\theta}{V_{Th}} \text{ ; mm/V}$$

V_{Th} = Voltage across galvanometer

Note:

In the Wheatstone bridge method, the effect of lead resistance is not eliminated; hence, it is unsuitable for measuring low resistance.

3. Ohmmeters

(a) Series Type ohmmeter

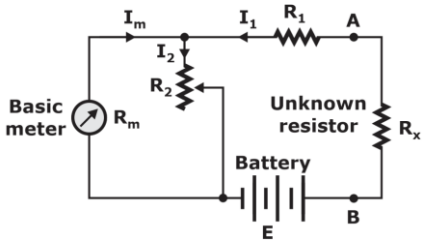

Half scale resistance, $R_h = R_1 + \frac{R_2R_m}{R_2 + R_m}$

Meter current, $I_m = \frac{ER_2}{(R_h + R_X)(R_2 + R_m)}$

Full-scale deflection current, $I_{fs} = \frac{ER_2}{R_h(R_2 + R_m)}$

The friction of full-scale reading, $S = \frac{I_m}{I_{fs}} = \frac{R_m}{R_x + R_h}$

(b) Shunt Type Ohmmeter

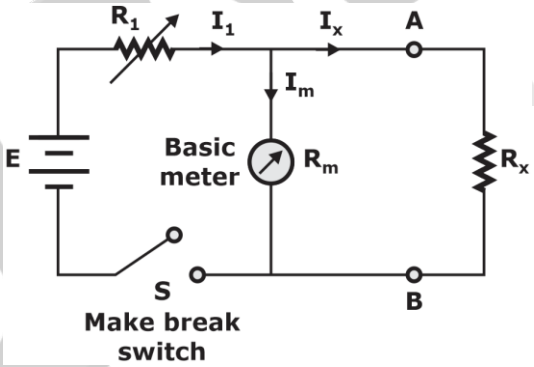

Half-scale reading of unknown resistance R_x is

$$R_h = \frac{R_1R_m}{R_1 + R_m}$$

Half scale reading of the meter, $I_h = 0.5I_{fs} = \frac{ER_h}{R_1R_m + R_h(R_1 + R_m)}$

Where, R_m = Internal resistance of meter, R_1 = Adjustable resistor (as shown in figure)

E = Supply voltage

Measurement of low resistance

The different methods employed are:

(i) Kelvin's double bridge method

(ii) Ammeter voltmeter method

(iii) Potentiometer method

Kelvin's Double Bridge Method

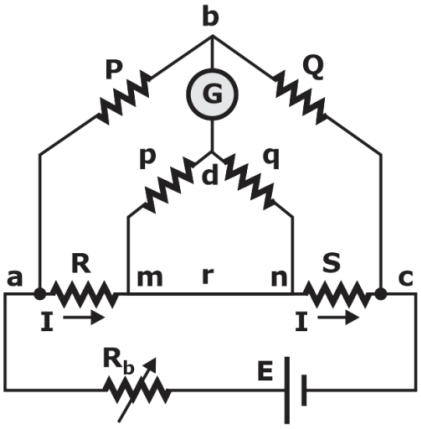

For zero galvanometer deflection, $E_{ab} = E_{amd}$

$$R = \frac{P}{Q}.S + \frac{qr}{p+q+r}\left[\frac{P}{Q} - \frac{p}{q}\right]$$

If $\frac{P}{Q} = \frac{p}{q}$

Then $R = \frac{P}{Q}.S$

Note:

Accuracies by Kelvin double bridge method

(i) From 1000 μΩ to 1.0 Ω: 0.005%, (ii) From 100 μΩ to 1000 μΩ: 0.05% to 0.05%

(iii) From 10 μΩ to 100 μΩ: 0.5% to 0.2%

Measurement of High Resistance

The different methods employed are:

(i) Loss of charge method

(ii) Megger

(iii) Direct deflection method

(iv) Mega ohm bridge

1. Loss of charge Method

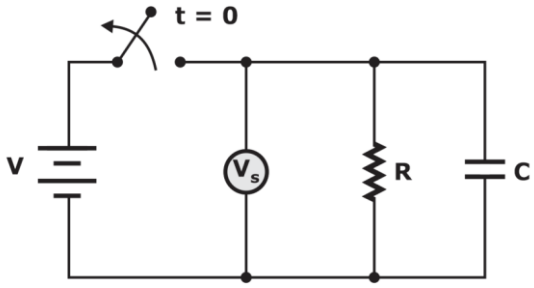

$$R = \frac{0.4343t}{C\log_{10}\left(\frac{V}{V_C}\right)}$$

2. Megger

- Megger works on the principle of electrodynamometer.
- Megger is used to measure cable, motor, generator insulation resistance, etc.
- Deflecting torque angle is proportional to the resistance of the insulator, which is under test.
- It is also used to check the continuity of cable.
- No external control torque was provided. Air friction damping is used.
- No need of an external power supply.

Note:

High resistance have a guard terminal which is used to avoid leakage current.

Carry Foster Slide Wire Bridge

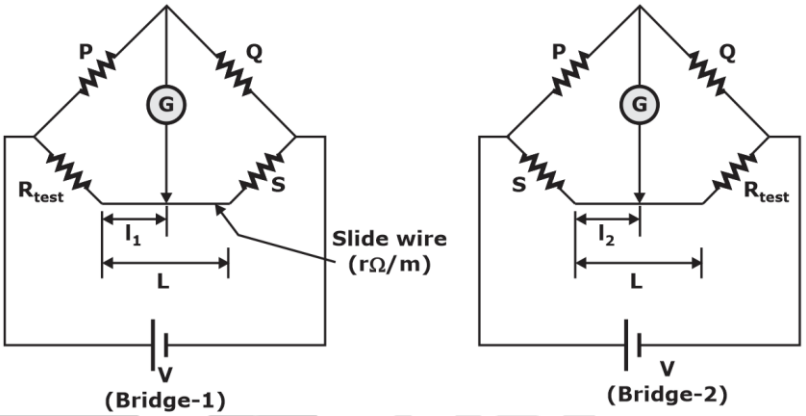

From bridge (1), $\frac{P}{Q} + 1 = \frac{R + S + Lr}{S + (L - l_1)r}$ ...(i)

From bridge (2), $\frac{P}{Q} + 1 = \frac{R + S + Lr}{R + (L - l_2)r}$ ...(ii)

Equating equation (i) and (ii)

$R - S = (l_2 - l_1)r$

Note:

Carry Foster bridge method is used for medium resistance measurement compared with standard resistance.

A.C. Bridges:-

Used to measure self-inductance, Mutual inductance, capacitance, and frequency.

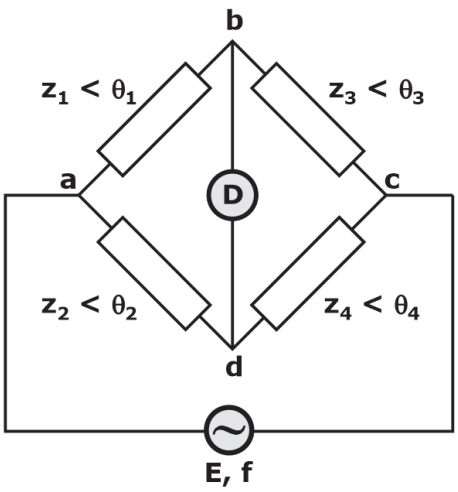

General Equation for bridge balance, $\bar{z}_1\bar{z}_4 = \bar{z}_2\bar{z}_3$

Magnitude condition, $|z_1|\,|z_4| = |z_2|\,|z_3|$

Angle condition, $\angle\theta_1 + \angle\theta_4 = \angle\theta_2 + \angle\theta_3$

Note:

Magnitude and angle conditions must be satisfied for the bridge to be balanced.

Depending upon the frequency, different null detectors are used.

Vibration galvanometer - 5 Hz to 1 kHz

Headphones - 250 Hz to 4 kHz

Tuned amplifier detector - 10 Hz to 100 kHz

D'Arsonval Galvanometer -DC frequency=0 Hz

Depending upon Phase angle θ, elements are

θ	Elements
0°	R
90°	L_1
-90°	C_1
$0^o < \theta_1 < 90^o$	R_1, L_1
$-90^o < \theta_1 < 0^o$	R_1, C_1

Convergence to balance point:

If the variables are in the same arm of the bridge then minimum time is required for balancing of bridge. This is called convergence to balance point.

Quality factor (Q.F.), $Q.F. = \dfrac{\text{Energy Stored}}{\text{Energy dissipated}}$

Measurement of Self Inductance

1. Maxwell's Inductance Bridge

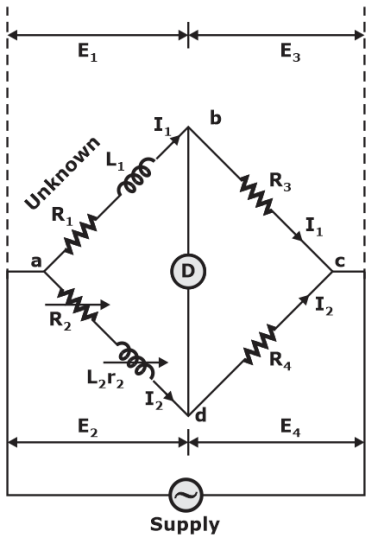

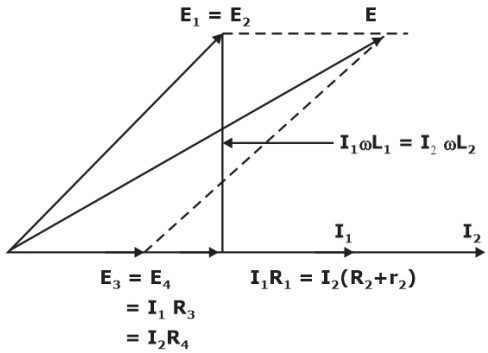

$$R_1 = \frac{R_3}{R_4}(R_2 + r_2), \quad L_1 = \frac{R_3}{R_4} \cdot L_4$$

Where,

L_1 = Unknown inductance of resistance R_1

L_2 = Variable inductance of fixe resistance r_2

R_2 = Variable resistance connected in series with L_2

R_3, R_4 = Known non-inductive resistance

2. Maxwell's Inductance-capacitance Bridge

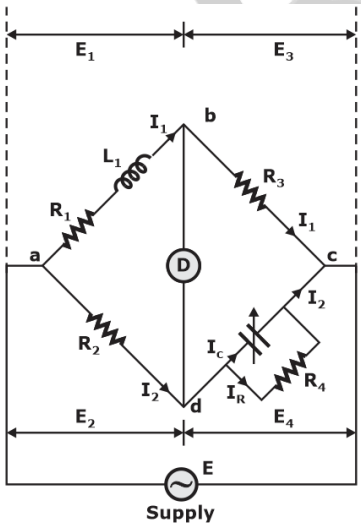

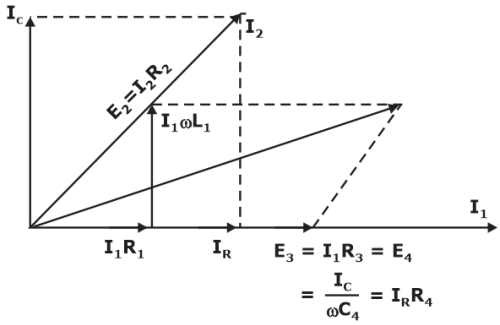

$R_1 = \frac{R_2 R_3}{R_4}$ and $L_1 = R_2 R_3 C_4$

Q factor of the coil, $Q = \frac{\omega L_1}{R_1} = \omega C_4 R_4$

Note:

- Not suitable for measurement of high Q coil because phase angle criteria do not satisfy.
- Not suitable for measurement of low Q-coil because of sliding balance problem.
- Suitable for measurement of medium Q coil, i.e. (1 < Q < 10).

3. Hay's Bridge

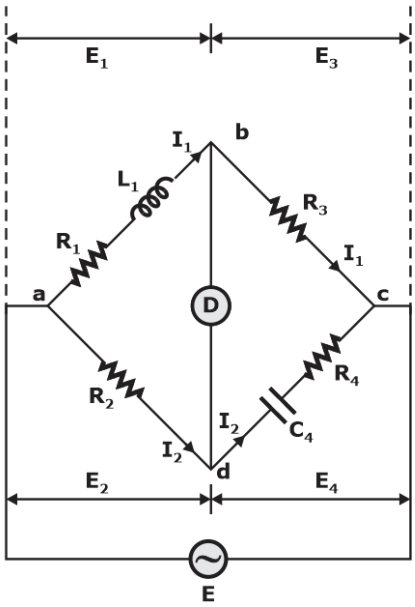

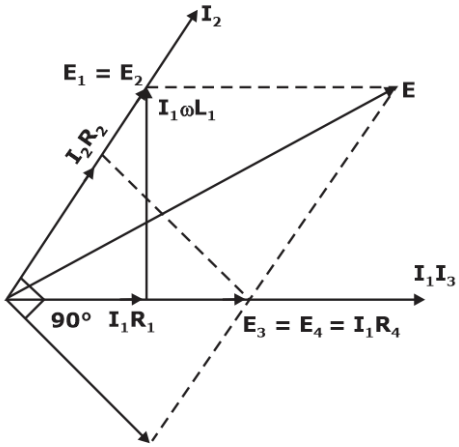

$$R_1 = \frac{\omega^2 R_2 R_3 R_4 C^2_4}{1+\omega^2 C^2_4 R^2_4} = \frac{R_2 R_3}{R_4}\left(\frac{1}{1+Q^2}\right)$$

$$L_1 = \frac{R_2 R_3 C_4}{1+\omega^2 C^2_4 R^2_4} = \frac{R_2 R_3 C_4}{1+\left(\frac{1}{Q}\right)^2}$$

For Q > 10

$L_1 = R_2 R_3 C_4$

$$Q = \frac{\omega L_1}{R_1} = \frac{1}{\omega C_4 R_4}$$

Where,

L_1 = Unknown-inductance having a resistance R1

R_2, R_3, R_4 = Know non-inductive resistance

C_4 = Standard capacitor

Note: The Hay's bridge is suited for measuring high Q inductors.

4. Anderson's Bridge

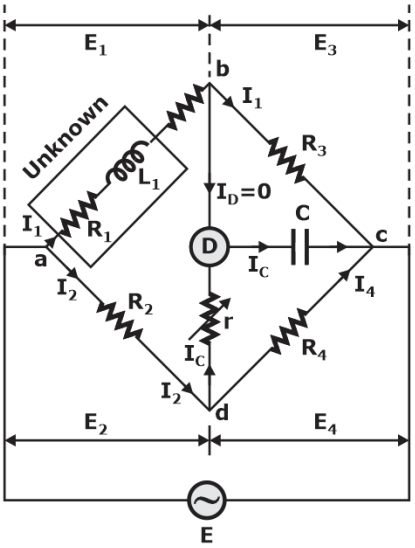

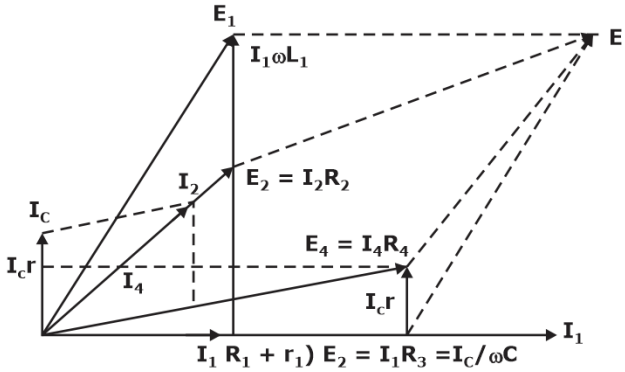

$$R_1 = \frac{R_2R_3}{R_4} - r_1$$

$$L_1 = \frac{CR_3}{R_4}\left[r\left(R_4 + R_2\right) + R_2R_4\right]$$

Where,

L_1 = Self-inductance to be measured

R_1 = Resistance of self-inductor

r_1 = Resistance connected in series with self-inductor

r, R_2, R_3, R_4 = Known non-inductive resistances

C = Fixed standard capacitor

5. Owen's Bridge

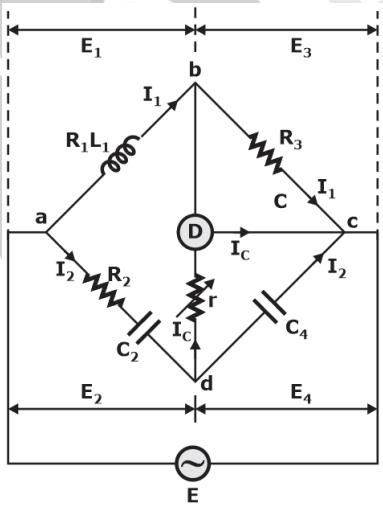

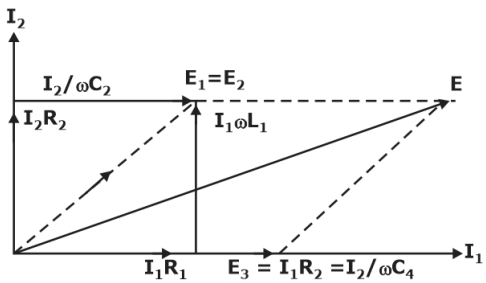

$$L_1 = R_2\, R_3\, C_4$$

$$R_1 = R_3\,\frac{C_4}{C_2}$$

Where,

L_1 = Unknown self-inductance of resistance R_1

R_2 = Variable non-inductive resistance

R_3 = Fixed non-inductive resistance

C_2 = Variable standard capacitor

C_4 = Fixed standard capacitor

Note:

Owen's bridge is used for the measurement of unknown inductance and incremental inductance and incremental permeability (μ).

Measurement of Incremental Inductance

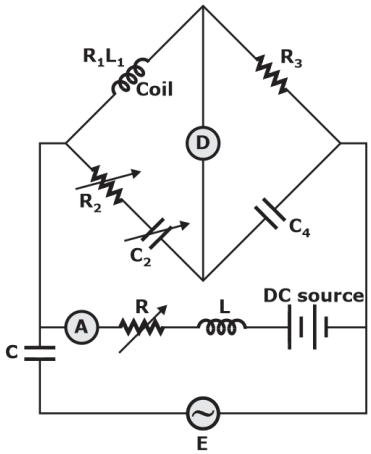

Incremental inductance, L1 = R_2 R_3 C_4

Incremental permeability, $\mu = \frac{L_1 i}{N^2 A}$

Where,

N = Number of turns

A = Area of flux path

l = Length of flux path

R_2 = Variable non-inductive resistance

R_3 = Fixed non-inductive resistance

C_4 = Fixed standard capacitor

Note:

- External D.C. Source is used to compensate residual magnetism.
- Capacitor, C is to block D.C. from entering into A.C. and inductor, L is to block A.C. from entering into D.C.

Measurement of Capacitance

1. De Sauty's Bridge

(a) For lossless capacitor

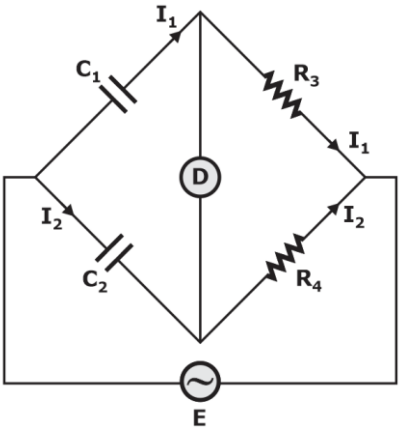

$$C1 = \frac{C_2R_4}{R_4}$$

Where,

C_1 = Capacitor whose Capacitance to be measured

C_2 = A Standard capacitor

R_3, R_4 = Non-inductive resistors

(b) For imperfect capacitor having dielectric loss

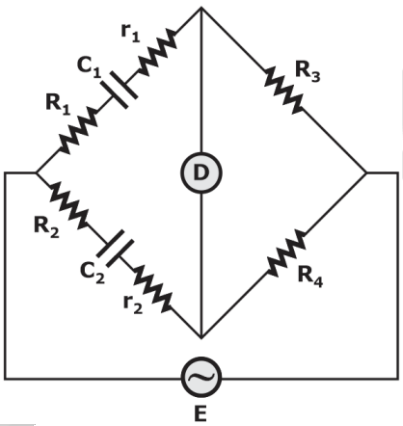

$$\frac{C_1}{C_2} = \frac{R_4}{R_3} = \frac{R_2 + r_2}{R_1 + r_1}$$

Where,

r_1, r_2 = Resistance representing the loss component of the two capacitors.

Dissipation factor

$D = \omega C_1 r_1 = \omega C_2 r_2$

2. Schering Bridge

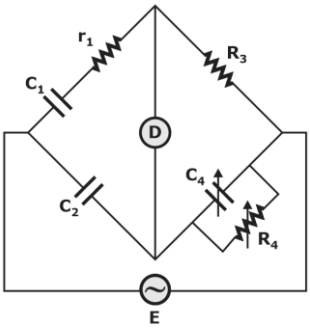

$$r_1 = \frac{R_3C_4}{C_2}$$

$$\mathbf{C_1 = r_1\, C_2 \left(\frac{R_4}{R_2}\right)}$$

Dissipation factor

$D = \omega C_1 r_1 = \omega C_2 R_2$

Where,

C_1 = capacitor whose capacitance is to be determined

r_1 = Series resistance representing the loss in the capacitor C_1

C_2 = Standard loss-free capacitor

R_3 = Non-inductive resistance

C_4 = Variable capacitor

R_4 = Variable non-inductive resistance in parallel with variable capacitor C_4

Note: Schering bridge is shielded with a metal screen to reduce the stray capacitance exists between the arms and arms to the earth.

Measurement of Frequency

Wien's Bridge

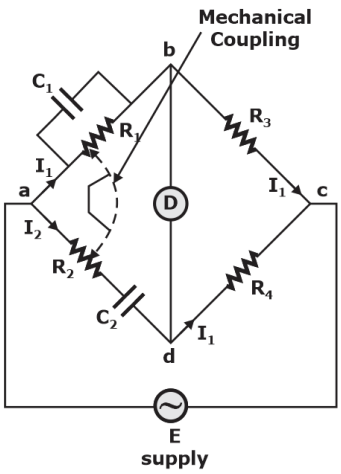

Frequency

$$\frac{R_4}{R_3} = \frac{R_2}{R_1} + \frac{C_1}{C_2}$$

$$f = \frac{1}{2\pi\sqrt{R_1R_2C_1C_2}} \text{ Hz}$$

For $R_1 = R_2 = R$ and $C_1 = C_2 = C$

$$f = \frac{1}{2\pi RC}$$

$$\frac{R_4}{R_3} = 2$$

Limitation of Wein's Bridge

If the input signal is not a sinusoidal or a signal containing harmonics, then bridging is not possible because the null detector is sensitive to the frequencies.

Q-meter

It works on the principle of series resonance.

Measurement of the Storage Factor Q

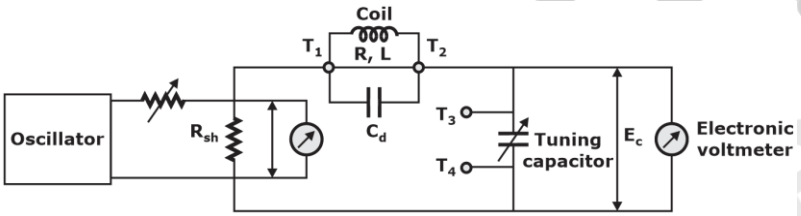

The resonant frequency of Q-Meter, $f_0 = \frac{1}{2\pi\sqrt{LC}}$

Measured value of Q, $Q_m = \frac{\omega_0 L}{R + R_{sh}}$

True value of Q, $Q_t = \frac{\omega_0 L}{R} = Q_m = \left(1 + \frac{R_{sh}}{R}\right) = Q_m\left(1 + \frac{C_d}{C}\right)$

Where, R = Resistance of coil, L = Inductance of coil, R_{sh} = Shunt resistance
C = Tuning Capacitance, C_d = Distributed or self–capacitance

Measurement of inductance, $L = \frac{1}{4\pi^2 f_0^2 C}$

Measurement of effective resistance, $R = \frac{\omega_0 L}{Q_t}$

Measurement of Distributed or self–capacitance

Resonance frequency $f_1 = \frac{1}{2\pi\sqrt{L(C_1 + C_d)}}$, $f_2 = \frac{1}{2\pi\sqrt{L(C_2 + C_d)}}$

When, $f_2 = nf_1$ then, $C_d = \frac{C_1 - n^2C_2}{n^2 - 1}$

where, C_1 = Tuning capacitance at frequency f_1, C_2 = Tuning capacitance at frequency f_2

Measurement of Unknown Capacitance C_x

Adjust capacitor $C = C_1$ to get resonance frequency f1 with unknown capacitance C_x in parallel.

$$f_1 = \frac{1}{2\pi\sqrt{L(C_x + C_1)}} \qquad \text{...(i)}$$

Now remove C_x and again adjust $C = C_2$ to get same resonance frequency f_1

$$f_1 = \frac{1}{2\pi\sqrt{LC_2}} \quad ...(ii)$$

By equating equation (i) and (ii)

$C_x = C_2 - C_1$

Chapter-5

Digital Instruments & Instrument Transformers

Cathode Ray Oscilloscope

CRO is a digital instrument, which works on the principle of thermionic emission i.e. emission of electron from a heated surface. It is a linear device. With the use of CRO, one can measure peak to peak, rms, peak or average value of voltage and current.

Calibration of CRO

Calibration of CRO is done by applying a known quality of square signal.

The rise time (t_r), of signal applied to CRO and bandwidth of CRO are related as

$t_r \times B.W. = 0.35$

If this condition fails, then the signal is distorted at the output of CRO.

Electrostatic Deflection

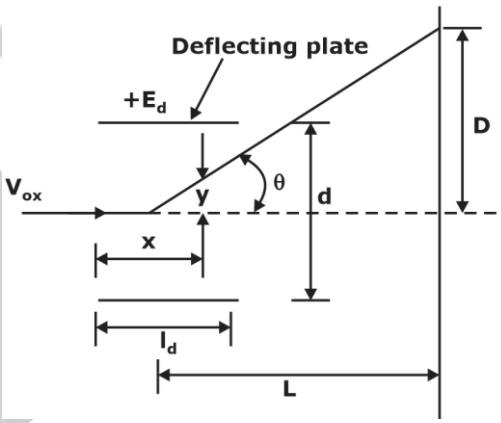

$$y = \frac{1}{2}\frac{eE_y}{mv_{ox}^2}x^2$$

where, y = Displacement in y-direction; m, e = Charge of an electron; Coulomb

E_y = Electric field intensity in Y-direction; V/m, m = Mass of electron; kg

V_{ox} = Velocity of electron when entering the fields of deflecting plates; m/s

x = Displacement in x-direction; m

Deflection

$$D = \frac{L\, l_d\, E_d}{2d\, E_a}$$

Where,

L = Distance between screen and the center of deflecting plates; m

l_d = Length of deflecting plates; m,

E_d = Potential between deflecting plates; V

d = Distance between deflecting plates; m,

E_a = Voltage of pre-accelerating anode; V

Deflection sensitivity:

$$S = \frac{D}{E_d} = \frac{L\, l_d}{2dE_a} \quad m/v$$

Deflection factor:

$$G = \frac{1}{S} = \frac{2dE_a}{L\, l_d} \quad v/m$$

Sawtooth Generator:

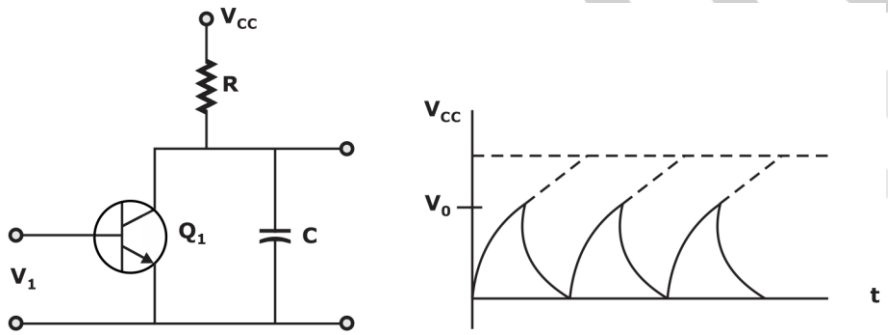

$V_0 = V_{cc}\,[1 - \exp(-t/RC)]$

Where,

V_0 = Instantaneous voltage across the capacitor at time t; V_{cc} = Supply voltage

Lissajous patterns

If horizontal and vertical deflecting plates are applied with sinusoidal signal, the waveform pattern appearing on the screen is called Lissajous pattern.

Application

- Used to find the phase angle difference between the signal applied to vertical and horizontal plates.
- Used for finding the frequency ratio between vertical and horizontal plates voltage.

Phase angle (f), between V_a and V_y	Lissajous pattern
0° or 360°	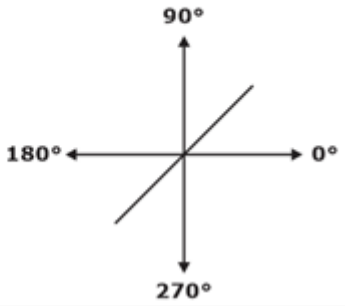
0° < ϕ < 90° or 270° < ϕ < 360°	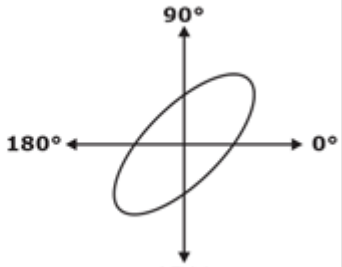
ϕ = 90° or 270°	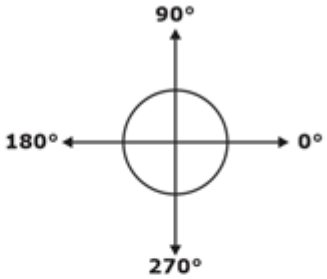
90° < ϕ < 180° or 180° < ϕ < 270°	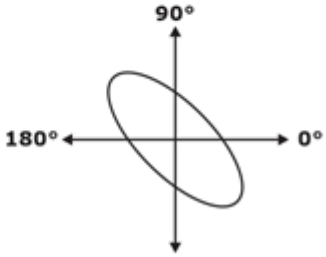
ϕ =180°	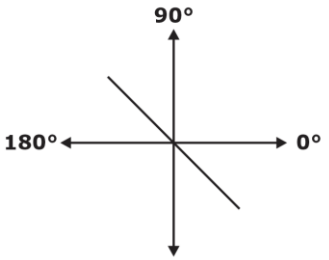

Finding the phase angle ϕ from given Lissajous pattern

(a) When Lissajous pattern is in first and third quadrants

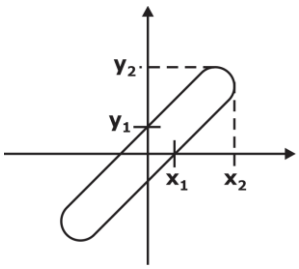

First possibility, $\phi = \sin^{-1}\left(\frac{x_1}{x_2}\right) = \sin^{-1}\left(\frac{y_1}{y_2}\right)$

Second possibility = 360° – ϕ

(b) When Lissajous pattern is in second and fourth quadrant

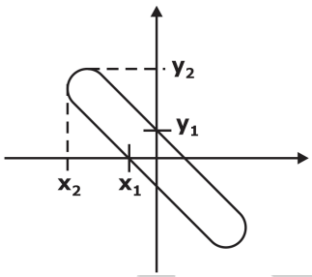

First possibility

$\phi = 180^{o} - \sin^{-1}\left(\frac{x_1}{x_2}\right)$

Second possibility = 360° – ϕ

Measurement of Frequency Using Lissajous Pattern

$$\frac{f_y}{f_x} = \frac{\text{(number of intersections of the horizontal line with the curve)}}{\text{(number of intersections of the vertical line with the curve)}}$$

Where,

f_y = Frequency of signal applied to Y plates

f_x = Frequency of signal applied to X plates

Digital Meters

Basic measurable quantity in digital meter is D.C.

1. **Resolution (R) of Digital Meter**

The smallest change in the input that a digital meter can detect is called resolution.

$$R = \frac{1}{10^n}$$

Where, n = Number of full digit.

2. **Sensitivity (S)**

The smallest change in input that can be displayed within given range.

S = Resolution × Range of meter

3. **Over ranging**

Switch on the extra half (1/2) is called over ranging. Due to this over ranging, the range of the instrument increases.

Instrument Transformers

Ratios of Instrument Transformers:

1. **Transformation Ratio (R)**

It is the ratio of the magnitude of the primary phasor to the secondary phasor.

$$R = \frac{|\text{primary phasor}|}{|\text{secondary phasor}|}$$

For current transformer (C.T.), $R = \frac{\text{primary winding current}}{\text{secondary winding current}}$

For potential transformer (P.T.), $R = \frac{\text{primary winding voltage}}{\text{secondary winding voltage}}$

2. **Nominal Ratio (K_n)**

It is the ratio of rated primary winding current (or voltage) to the rated secondary winding current (or voltage)

For C.T., $K_n = \frac{\text{rated primary winding current}}{\text{rated secondary winding current}}$

For P.T., $K_n = \frac{\text{rated primary winding voltage}}{\text{rated secondary winding voltage}}$

3. **Turns Ratio (n)**

For C.T., $n = \frac{\text{number of turns of secondary winding}}{\text{number of turns of primary winding}}$

For P.T, $n = \frac{\text{number of turns of primary winding}}{\text{number of turns of secondarywinding}}$

4. **Ratio Correction Factor**:

$$RCF = \frac{R}{K_n}$$

Remember:

The ratio marked on the transformers is their nominal ratio.

Current Transformer Equivalent Circuit

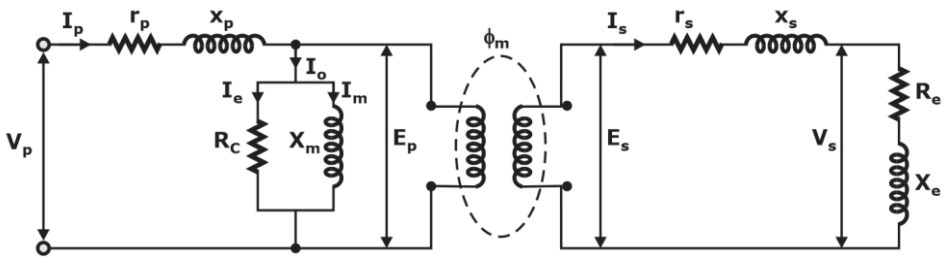

Where,

r_s, X_s = resistance, reactance of secondary winding

r_e, X_e = resistance , reactance of external burden

E_p, E_s = primary and secondary winding induced voltage

N_p, N_s = number of primary and secondary winding turns

I_p, I_s = primary and secondary winding current

ϕ= flux in transformer

θ = phase angle of transformer

δ = angle between secondary winding induced voltage and secondary winding current

Δ = phase angle of secondary winding load circuit

I_o = exciting current

I_m = magnetizing component of exciting current

I_e = loss component of exciting current

α = angle between exciting current and flux

Phasor Diagram

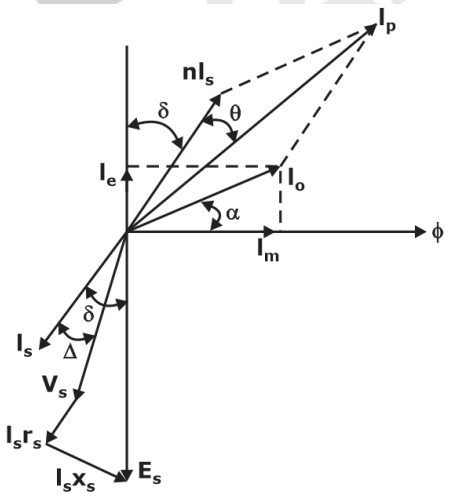

Transformation ratio

$$R = \frac{I_P}{I_S} = \frac{nI_S + I_0 \cdot \sin(\delta + \alpha)}{I_S} = n + \frac{I_0}{I_S}\sin(\delta + \alpha)$$

$$R = n + \frac{I_0}{I_S}\sin(\delta + \alpha) = n + \frac{I_0}{I_S}(\sin\delta\cos\alpha + \cos\delta\sin\alpha)$$

$$R = n + \frac{I_M \sin\delta + I_C \cos\delta}{I_S}$$

Where, $I_m = I_o \cos\alpha$

$I_C = I_o \sin\alpha$

Phase angle

For very small angles, $\theta \approx \frac{I_0 \cdot \cos(\delta+\alpha)}{nI_S + I_0 \cdot \sin(\delta+\alpha)}$

This expression can still be simplified with the assumption $I_0 << nI_s$.

$$\theta \approx \frac{I_0 \cdot \cos(\delta+\alpha)}{nI_S} \text{rad}$$

$$\theta \approx \frac{I_0(\cos\delta\cos\alpha - \sin\delta\sin\alpha)}{nI_S} \approx \frac{I_M \cos\sigma - I_C \sin\delta}{nI_S} \text{rad}$$

Phase angle of CT is given by

$$\theta \approx \frac{180}{\pi}\left(\frac{I_M \cos\delta - I_C \sin\delta}{nI_S}\right) \text{degrees}$$

Ratio error

$$\text{Ratio error} = \frac{\text{nominal ratio } (K_n) - \text{actual ratio } (R)}{\text{actual ratio } (R)}$$

Remember:

- The primary current of C.T depends on load connected to the system but does not depend on the secondary winding burden.
- Primary winding is single turn or bar winding and secondary has more number of turns to reduce the current in secondary.
- If primary current is very high, it causes reduction is ratio error and phase angle error. So to increase value of primary current the primary is maintained with single turn.
- The secondary number of turns is reduced by 1 or 2, then the ratio error reduces.

Potential transformer

Actual transformation (voltage) ratio

$$R = n + \frac{\frac{I_s}{n}\left[R_P \cos\Delta + X_p \sin\Delta\right] + I_e r_p + I_m x_P}{V_s}$$

Phase angle

$$\theta = \frac{I_s}{V_s}\left(X_s \cos\Delta - R_s \sin\Delta\right) + \frac{I_e X_p - I_m r_p}{nV_s} \text{rad.}$$

Note:

- C.T never operates with secondary winding open but P.T can be operated with secondary winding open.

- Strip wound core is used to reduce ratio and phase angle errors.

Application of C.T and P.T

- Multiple operation with a single device.
- High current and higher voltage are step down to lower current and lower voltage so that metering is easier.
- Measuring circuit is isolated from the power circuit.
- Low power consumption.
- Replacement is easier.

Potentiometer

1. Zero Order System

As input changes, output also changes immediately called zero order system. Examples: Resistor.

2. First Order System

As input changes, output also changes but not immediately, it takes some delay but without oscillation. Example: heater.

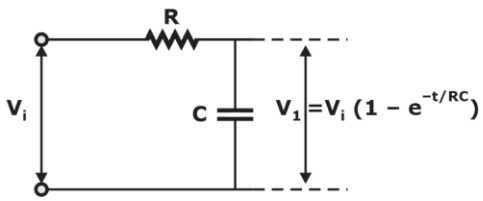

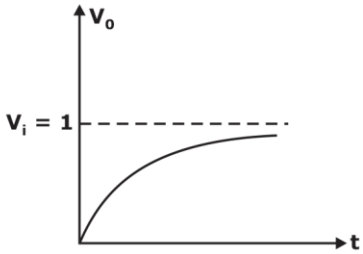

3. Second Order system

As input changes, output also changes, with some delay and oscillation.

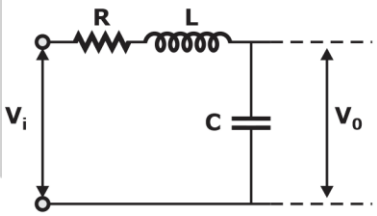

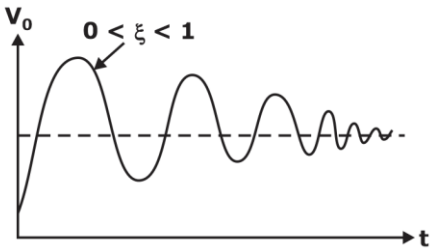

Remember:

The analog instruments are of second order instrument which has damping factor (ξ) between 0.6 to 0.8. It is under damped.

Standards

Quantity	Limit	Definition
Length	Meter	The length of path travelled by light in an interval of $\frac{1}{299792458}$ sec.
Time	Second	9.192631770 × 109 cycles of radiation from vaporized ceslum-133 atom.
Temp.	Kelvin	The temperature difference between the absolute and the triple point of water is defined as 273.16°K.
Voltage	Volt	Standard cell voltage of Weston cell i.e., 1.0186 V.
Current	Ampere	One ampere is the current flowing through two infinite cross section placed 1 meter apart produced a force of 2 ×10−7 N/m.

Magnetic Measurements

Flux density

$$B = \frac{\phi}{A_s} = \frac{RK_q\theta_1}{2NA_s}$$

Where, ϕ = Flux linking search coil, A_s = Cross-sectional area of specimen,

R = Resistance of the ballistic galvanometer circuit

$K_q\theta_1$ = Charge indicated by ballistic galvanometer

N = Number of turns in the search coil Hysteresis loss per unit volume, $P_h = \eta f B_m k$

Where, η = Hysteresis coefficient, f = Frequency; Hz, B_m = Maximum flux density; Wb/m2

k = Steinmetz coefficient

Note: The value of k varies from 1.6 to 2.

Eddy current loss per unit volume for laminations, $Pe = \frac{4k_f^2 f^2 B_m^2 t^2}{2\rho}$

Where, k_f = Form factor, t = Thickness of laminations; m, ρ = Resistivity of material; Ω-m

Total iron loss per unit volume, $p_1 = p_h + p_e = \eta f B_m k + \frac{4k_f^2 f^2 B_m^2 t^2}{3\rho}$

Maximum flux density, $B_m = \frac{E_2}{4k_f f A_s N_2}$

For sinusoidal supply, $B_m = \frac{E_2}{4.44 f A_s N_2}$

Where, E_2 = Voltage induced in secondary winding, $E_2 = 4k_f\, f\, \phi_m\, N_2$

K_f = Form factor (= 1.11 for sinusoidal), f = Frequency

A_s = Cross-sectional area of specimen, N_2 = Number of turns in secondary winding

ϕ_m = Maximum flux linkage

****