Boolean Logic

Boolean logic is widely used in digital electronics as a form of algebra. The idea of Boolean Logic is that all the expressions or values are true or false. It mainly uses three basic Boolean operators: OR operator, AND operator, and NOT operator.

Because it works well with the binary numbering system, in which each bit can either have a value of 1 or 0, Boolean logic is particularly crucial for computer science. A different perspective would be that each bit has a value of either TRUE or FALSE.

Boolean Expression for Logic Gates

A logical statement that can only be TRUE or FALSE is called a Boolean expression. Any form of data can be compared using Boolean expressions as long as both portions of the expression use the same fundamental data type. Data can be tested to see if it is more than, equal to, or less than other data.

A Boolean expression can consist of Boolean information or data, such as the following:

- Boolean formulas consist of Boolean variables.
- Boolean Values in the form of TRUE or False or in the binary form 1 or 0, respectively.
- Functions result in Boolean values(0 or 1) or Boolean expressions.

Boolean Theorems

Theorems in Boolean algebra are employed to alter the form of Boolean expressions. Boolean theorems may be applied to an expression to reduce its number of minterms. Digital logic has the following Boolean algebraic theorems and laws:

- DeMorgan's Theorem: (A.B)' = A' + B'
- Consensus Theorem: AB + A'C + BC= AB+ A'C
- Duality Theorem
- Redundant Theorem
- Complementary Theorem

Boolean Logic Operations

Conjunction, disjunction, and negation are the three fundamental Boolean logic operations. The related binary operators AND, OR, and the unary operator NOT, collectively referred to as Boolean operators, are used to express these Boolean operations.

The truth table for the basic boolean algebra operations is as follows:

OR Operation

A	B	A OR B
0	0	0
0	1	1
1	0	1
1	1	1

AND Operation

A	B	A AND B
0	0	0
0	1	0
1	0	0
1	1	1

NOT Operation

A	NOT A
0	1
1	0

Boolean Logic Example

Find the Boolean algebra expression for the given logic system.

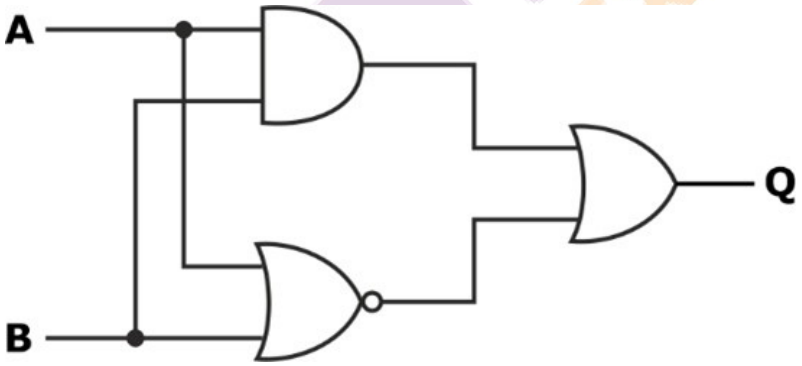

Solution:

The system consists of an OR Gate, a NOR Gate, and an AND Gate. The expression for the AND gate is A.B, and the expression for the NOR gate is $\overline{A+B}$. Both these expressions are also separate inputs to the OR gate. Thus, the final output expression is given as:

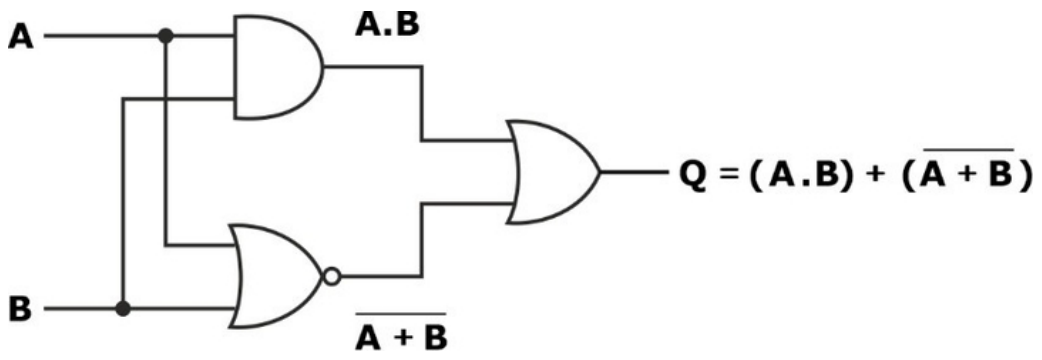

The output of the system will be $Q = (A.B) + (\overline{A+B})$, but the notation $\overline{A+B}$ is the same as the De Morgan's notation $\overline{A}.\overline{B}$, Then substituting $\overline{A}.\overline{B}$ into the output expression gives us the final output notation of $Q = (A.B) + (\overline{A}.\overline{B})$, which is the Boolean notation for an Exclusive-NOR Gate.

The truth table for the above circuit is:

Inputs		Intermediates		Output
B	A	A.B	$\overline{A+B}$	Q
0	0	0	1	1
0	1	0	0	0
1	0	0	0	0
1	1	1	0	1