MEGA MOCK CHALLENGE

BYJU'S EXAM PREP

KTPCL AE

Electrical Engineering

Mega Mock Challenge

(February 19th - February 20th 2022)

Questions & Solutions

1. Which of the following is Poisson's equation?

A. $\nabla^2 v = 0$

B. $\nabla^2 v = -k;\ k = \text{constant}$

C. $\nabla J = -\frac{\partial P_v}{\partial t}$

D. $\nabla^2 E + E = 0$

Ans. B

Sol.

$$\nabla^2 v = -\frac{P_v}{\underbrace{\varepsilon}_{\text{Constant}}} = \text{Poisson's equation}$$

$$\boxed{\nabla^2 v = -K}$$

$$\nabla^2 v = 0 \rightarrow \text{Laplace equation}$$

$$\nabla J = -\frac{\partial P_v}{rf} \rightarrow \text{Continuity equation}$$

2. For a purely inductive rotor of a 3 – phase induction machine, if rotor power factor angle is 90°, then electromagnetic torque becomes

A. 0

B. Maximum

C. In between minimum to maximum

D. None of the above

Ans. A

Sol.

$$T_e = \frac{\pi}{8} P^2 \phi F_2 \sin(90° + \theta_2)$$

Where θ_2 = Rotor power factor angle = 90° (Given)

So, $Te = \frac{\pi}{8} P^2 \phi F_2 \sin(90° + 90°)$

$$Te = \frac{\pi}{8} P^2 \phi F_2 \sin 180°$$

= 0

3. Swinburne's Test is related to

A. Transformer

B. Induction Machine

C. Synchronous Machine

D. DC Machine

Ans. D

Sol. Swinburne's test is the most commonly used and simplest method of testing of shunt and compound wound DC machines which have constant flux. In this test the efficiency of the machine at any load is pre-determined. We can run the machine as a motor or as a generator.

4. Consider the series R-L circuit shown in figure below. For obtaining transient free response, switch should be closed at instant t = t_0. Find the value of t_0. (consider R = ωL)

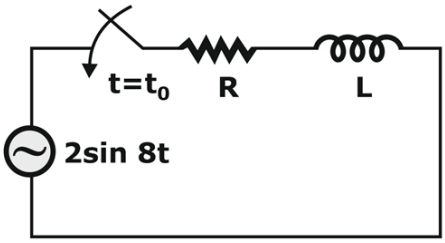

A. $\frac{\pi}{32}$ s

B. $\frac{\pi}{16}$ s

C. $\frac{\pi}{4}$ s

D. $\frac{\pi}{8}$ s

Ans. A

Sol. For obtaining transient free response.

$$\tan(\omega t_0) = \frac{\omega L}{R}$$

$$\therefore \omega t_0 = \tan^{-1}\left(\frac{\omega L}{R}\right)$$

R = ωL

$\therefore \omega t_0 = \tan^{-1}(1)$

$$\omega t_0 = \frac{\pi}{4}$$

$$\omega = 8 \text{rad/s}$$

$$\therefore 8t_0 = \frac{\pi}{4}$$

$$\Rightarrow t_0 = \frac{\pi}{32} \text{s}$$

5. The solution to the system of equation is

$$\begin{bmatrix} 6 & 15 \\ -6 & 4.5 \end{bmatrix} \begin{bmatrix} x \\ y \end{bmatrix} = \begin{bmatrix} 12 \\ -90 \end{bmatrix}$$

A. −4, 12

B. 4, 12

C. 12, −4

D. −12, −4

Ans. A

Sol.

$$\begin{bmatrix} 6 & 15 \\ -6 & 4.5 \end{bmatrix} \begin{bmatrix} x \\ y \end{bmatrix} = \begin{bmatrix} 12 \\ -90 \end{bmatrix}$$

$R_2 \rightarrow R_1 + R_2$

$$\begin{bmatrix} 6 & 15 \\ 0 & 19.5 \end{bmatrix} \begin{bmatrix} x \\ y \end{bmatrix} = \begin{bmatrix} 12 \\ -78 \end{bmatrix}$$

19.5y = −78

y = −4, x = 12

6. Find the voltage across the capacitor in the circuit shown below.

A. 9 + 7.07 sin (t – 135°) V

B. 9 + 1.414 sin (t – 225°) V

C. 9 V

D. 9 – 1.414 sin (t + 135°) V

Ans. A

Sol. Since there are different frequency sources present in the circuit. So, superposition theorem must be used to obtain the response.

(1) When V_1 = 10 sin t is operating

ω = 1 rad/s

$$X_L = \omega L = 1 \times 2 = 2\Omega$$

$$X_c = \frac{1}{\omega C} = \frac{1}{1 \times 1} = 1\Omega$$

$$Z_1 = R + j(X_L - X_C)$$

$$Z_1 = 1 + j(2-1)$$

$Z_1 = 1 + j = \sqrt{2} \angle 45^\circ$

$$i_1 = \frac{V_1}{Z_1} = \frac{10\sin t}{\sqrt{2}\angle 45^\circ}$$

$$i_1 = 5\sqrt{2}\sin(t - 45^\circ)$$

$$V_{C_1} = i_1 \times (-jX_C)$$

$$= i_1 \times (-j1)$$

$$= 5\sqrt{2}\sin(t - 45^\circ) \times (-j1)$$

$$V_{C_1} = 5\sqrt{2}\sin(t - 135^\circ)$$

$$V_{C_1} = 7.07\sin(t - 135^\circ)$$

(2) When V_2 = 9V (DC) is operating

ω = 0 ⇒ X_L = ωL = 0 and $X_C = \frac{1}{\omega C} \to \infty$

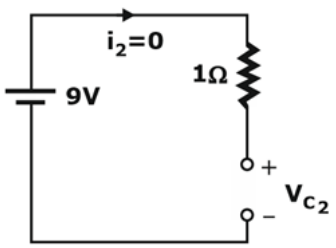

$\Rightarrow V_{C_2} = 9V$

By superposition theorem,

$$V_C(t) = V_{C_1} + V_{C_2} = 7.07\sin(t - 135°) + 9V$$

7. A reverse conducting thyristor (RCT) normally replaces

A. A pair of antiparallel thyristors in a circuit.

B. A combination of a thyristor and an antiparallel diode in a circuit.

C. A thyristor in situation where it is not required to have reversed blocking capability at all.

D. Converter grade thyristor.

Ans. B

Sol. RCT may be considered as a thyristor with a built in antiparallel diode.

8. Resonance frequency of the circuit shown below is

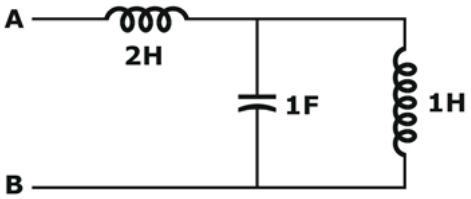

A. 3 rad/sec

B. 5 rad/sec

C. $\sqrt{\frac{3}{2}}\,rad/sec$

D. $\sqrt{\frac{2}{3}}\,rad/sec$

Ans. C

Sol.

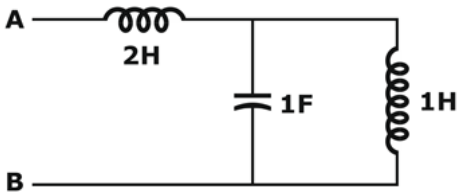

Impedance at frequency ω rad/ sec

$$z = 2j\omega + \frac{(j\omega \times 1) \times \frac{1}{j\omega \times 1}}{j\omega + \frac{1}{j\omega \times 1}}$$

$$z = 2j\omega + \frac{j\omega}{1 - \omega^2}$$

$$z = j\left(2\omega + \frac{\omega}{1-\omega^2}\right)$$

$$z = j\left(2\omega + \frac{\omega}{1-\omega^2}\right)$$

For calculation of resonance frequency imaginary part of z = 0

$$\left(2\omega + \frac{\omega}{1-\omega^2}\right) = 0$$

ω = 0 (not possible)

and

$$2 + \frac{1}{1-\omega^2} = 0$$

$2 - 2\omega^2 + 1 = 0$

$2\omega^2 = 3$

$$\omega^2 = \frac{3}{2}$$

$$\Rightarrow \omega = \sqrt{\frac{3}{2}} rad/sec$$

9. Which among the following statements are true regarding "avalanche" and "zener" breakdown?

1) For avalanche breakdown, electron hole pairs are responsible but for Zener breakdown, only electrons are responsible.

2) The Avalanche breakdown voltage has positive temperature coefficient and Zener breakdown voltage has negative temperature coefficient.

3) Junction is completely destroyed in avalanche breakdown but not in Zener breakdown.

4) In avalanche breakdown, breakdown voltage is inversely proportional to temperature and in Zener breakdown, it is proportional to temperature.

A. 1,2 and 4
B. 2, 3 and 4
C. 1,2 and 3
D. All statements are correct

Ans. C

Sol. Zener breakdown voltage is not proportional to temperature, it has a functional dependency on temperature.

Similarly, avalanche breakdown voltage also has a functional dependency on temperature.

So, statement 4 is not correct.

10. Match **List-i** (Controller) with **List-ii** (Type of load) and select the correct answer using the code given below the lists:

List-i

A- Chopper controlled resistance in the rotor circuit of an induction motor

B- Sub-synchronous converter-cascade in the rotor circuit of an induction motor

C- 3-phase a.c. voltage controller

D- Cycloconverter

List-ii

1. Very low speed, high-power reversible drive
2. Centrifuges in sugar industry
3. Blowers and compressors
4. Loads requiring good starting performance

A. A-3, B-4, C-2, D-1
B. A-3, B-4, C-1, D-2
C. A-4, B-3, C-1, D-2
D. A-4, B-3, C-2, D-1

Ans. A

Sol. For very low speed voltage controllers are not suitable as torque will also reduce in proportion to square of voltage. Resistance in rotor circuit affect the starting performance.

11. A 13-bus power system has 4 voltage-controlled buses. The dimension of the Jacobian matrix will be_____.

A. 22 × 22
B. 20 × 20
C. 26 × 26
D. 24 × 24

Ans. B

Sol. Total no. of Buses = 13

PV buses = 4

Slack bus = 1

Remaining buses = 8

Both V, δ terms appear in Jacobian matrix dimension.

Order of Jacobian matrix,

= (2 × 8 + 4) × (2 × 8 + 4)

= 20 × 20

12. The solution of the differential equation, $\frac{dy}{dx} = \frac{x+y}{x}$ satisfy the condition y(1) = 1 is

A. y = x ln(x) + x
B. y = ln(x)
C. y = ln(x) + x^2
D. y = $xe^{(x-2)}$

Ans. A

Sol.

Given: $\frac{dy}{dx} = \frac{x+y}{x}$

Using Homogeneous Method

Let y = vx

$$\frac{dy}{dx} = v + x\frac{dv}{dx}$$

So,

$$v + x\frac{dv}{dx} = \frac{x+vx}{x} = 1 + v$$

or, $x\frac{dv}{dx} = 1$

or, $dv = \frac{dx}{x}$

Integrating both side

v = ln(x) + ln(k)

As, $v = \frac{y}{x}$

y = x ln(x) + x ln(k)

y(1) = 1 (given)

1 = 0 + ln(k)

So, y = x ln(x) + x

13. The spring material used in a spring control device should have following property-

1. Must be low temperature coefficient

2. Should have low specific resistance.

3. Should have magnetic properties

A. 1 and 2 only

B. 2 and 3 only

C. 1 and 3 only

D. 1, 2 and 3

Ans. A

Sol. The essential requirements for spring material are-

1. They should be non-magnetic

2. They should be proof from mechanical fatigue

3. They should have low resistance temperature coefficient

14. The solution of the differential equation $\frac{dy}{dx} + 4xy = 4e^{-2x^2}$ is

A. $y = e^{-2x}$

B. $y = 4xe^{-x2}$

C. $y = (4x + c)e^{-2x^2}$

D. $y = (4x + c)e^{-x^2}$

Ans. C

Sol.

$$\frac{dy}{dx} + 4xy = 4e^{-2x^2}$$

Integrating factor, $I - f = e^{\int 4x dx} = e^{2x^2}$

$$y.e^{2x^2} = \int 4e^{-2x^2}.e^{2x^2}\, dx$$

$$y.e^{2x^2} = 4\int dx = 4x + c$$

$$y = (4x + c)e^{-2x^2}$$

15. Which of the following statement are correct regarding ROC of a signal?

1. ROC of a left sided signal is right side to right most pole in Laplace transform.

2. ROC of a left sided signal is not left sided if its pole is not inside the unit circle.

A. 1 only
B. 2 only
C. 1 and 2 both
D. Neither 1 nor 2

Ans. D

Sol. Both statement are wrong.

16. Consider the following statements regarding HVDC Distribution system

1) Less insulation is needed

2) Reliability is high

3) Transmit more power over a longer distance

4) Reduce line cost due to fewer conductors

Select the correct statements

A. 1 and 2 only
B. 1, 2 and 3 only
C. 1, 2, 4 only
D. 1, 2, 3 and 4

Ans. D

Sol. **HVDC Distribution System**

⇒ Better voltage regulation & control ability

⇒ low power losses

⇒ Transmit more power over a longer distance

⇒ less insulation is needed

⇒ Reliability is high

⇒ A synchronous interconnection is possible

⇒ Reduced line cost due to fewer conductor

⇒ Towers are cheaper, simple, and narrow

17. 8 consider the circuit shown in figure below the equivalent inductance across a & b is _____.

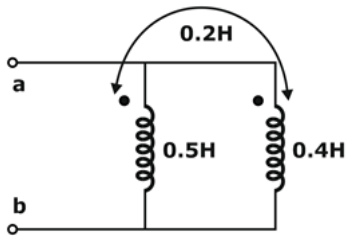

A. 0.32 H
B. 0.23 H
C. 0.64 H
D. 0.46 H

Ans. A

Sol. As seen from the figure it is a parallel combination

$$L_{ab} = \frac{L_1L_2 - M^2}{L_1 + L_2 - 2M}$$

$$L_{ab} = \frac{0.5 \times 0.4 - (0.2)^2}{0.5 + 0.4 - 2 \times 0.2}$$

$$L_{ab} = \frac{0.2 - 0.04}{0.9 - 0.4} = \frac{0.16}{0.5} = 0.32H$$

So Answer A will be correct.

18. Gray code equivalent of binary number 101101 is

A. 101010 B. 111000

C. 111011 D. 100111

Ans. C

Sol. Binary to Gray code conversion

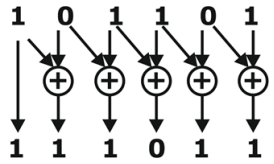

19. Which of the pole zero plot corresponds to an even function

A. 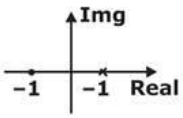

B. 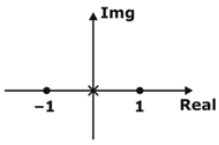

C. 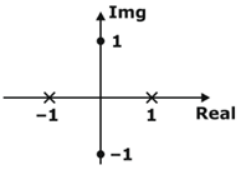

D. 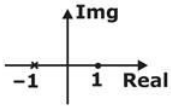

Ans. C

Sol. For a signal to be even, it must be either two sided or finite duration, therefore x(s) has poles, the ROC must be strip in the s-plane

For (a), $x(s) = \frac{As}{(s+1)(s-1)}$

So $x(-s) = \frac{-As}{(s+1)(s-1)} = -x(s)$

So x(t) is not even

For (b), ROC can not be chosen to corresponding to a two sided function x(t) ⇒ Not even

for (c), We have $x(s) = \frac{A(s-j)(s+j)}{(s+1)(s-1)}$

$$= \frac{A(s^2+1)}{(s^2-1)}$$

So $x(-s) = \frac{A(s^2+1)}{s^2-1} = x(s)$

So even

for (d) ,ROC cannot be chosen to corresponding to a two sided function x(t) ⇒ So not even

20. The correct statements with respect to SMPS are:

1. Transistors are used in active region.
2. Switching is done at high frequency.
3. SMPS supplies are small in size.

A. 1 and 2
B. 1 and 3
C. 2 and 3
D. 1, 2, and 3

Ans. C

Sol. In SMPS, transistor operates in switch mode at very high frequency.

Cut off region is used for off state and saturation region is used for ON state.

→ As such a high frequency, the size of filter as well as transformer is reduced. So these are compact in size.

→ With the availability of high-speed devices like power MOSFET, SMPS is popularity used now a days.

21. Which of the following statement is incorrect

A. Static Electric field is conservative
B. Magnetic field is solenoidal
C. Electric field is not solenoidal
D. Magnetic field is irrotational

Ans. D

Sol. For Static Electric field,

$\nabla \times \bar{E} = 0$

∴ Static electric field is conservative or irrotational

$\nabla \cdot \bar{B} = 0 \Rightarrow$ Magnetic field is solenoidal

$\nabla \cdot \bar{D} = \rho_v$

$\bar{D} = \varepsilon \bar{E}$

$\varepsilon \nabla \cdot \bar{E} = \rho_v$

$\nabla \cdot \bar{E} = \frac{\rho_v}{\varepsilon}$

∴ $\nabla \cdot \bar{E} \neq 0$ ⇒ Electric field is not solenoidal

$\nabla \times \bar{H} = J$

B = μH

$\Rightarrow \nabla \times \bar{B} = \frac{J}{\mu}$

∴ $\nabla \times \bar{B} \neq 0$ ⇒ Magnetic field is rotational.

22. If two identical JFETs are connected in parallels, then Drain resistance (resultant) will be

A. Double of single JFET
B. Half of single JFET
C. Exactly equal to single JFET
D. cannot be determined

Ans. B

Sol.

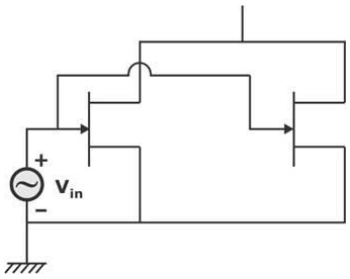

Small signal model of JFET

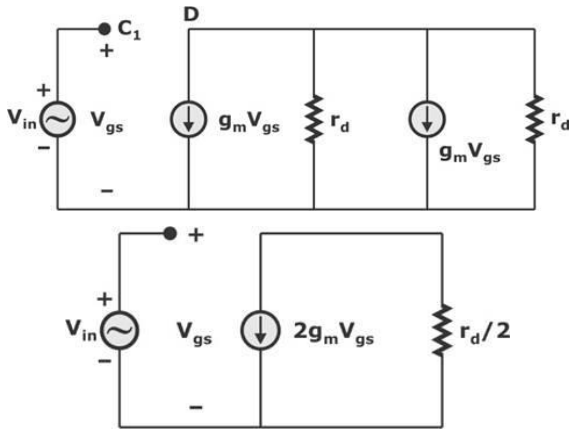

So $r_d' = r_d/2$

23. The open loop transfer function of unity feedback control system is given by G(s) = $\frac{k}{s(s^2+8s+T)}$, where k, T > 0. Using Routh's criterion, determine the value of k for which system will be stable?

A. k > 8T

B. k < 8T

C. k > 0

D. 0 < k < 8T

Ans. D

Sol. Characteristic Equation:

1 + G(s) H(s) = 0

$$1+\frac{k}{s(s^2+8s+T)}=0$$

$$s^3+8s^2+sT+k=0$$

Routh's array is shown below,

$$\begin{array}{c|cc} s^3 & 1 & T \\ s^2 & 8 & k \\ s & \frac{8T-k}{8} & 0 \\ s^0 & k & \end{array}$$

For system to be stable there should be no sign change in the first column of the Routh's array.

$\therefore \frac{8T-k}{8} > 0$ and k > 0

$8T - k > 0$

$k - 8t < 0$

$k < 8T$

$k > 0$

$\Rightarrow 0 < k < 8T$

24. For a transformer

S1: Eddy current loss depends on frequency but not on voltage.

S2: Hysteresis loss depends on frequency and voltage both.

Choose the correct option

A. S1 only
B. S2 only
C. Both S1 and S2
D. Neither S1 nor S2

Ans. B

Sol. Eddy current loss = $K_e f^2 B_m^2$

Since $B_m \rightarrow$ Depends on voltage and frequency

So Eddy current loss depends on Both V, F

So, S1 → False

Hysteresis loss → depends on frequency and voltage both

So S2 → True

25. A flip-flop is shown below,

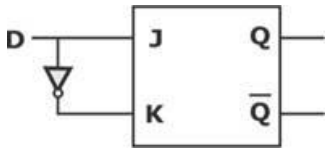

What could be the resultant flip-flop??

A. JK flip flop
B. D- flip flop
C. SR flip flop
D. T- flip flop

Ans. B

Sol. $J = D \quad K = \bar{D}$

We know $Q_{n+1} = J\bar{Q} + \bar{K}Q_n$ For JK flipflop

$= D\bar{Q} + \bar{D}Q_n$

$Q_{n+1} = D$

So, D-flip flop.

26. In a parallel resistive circuit, opening a branch result in

1) Increase in total resistance

2) Decrease in total power

3) No change in branch voltage

Which of the above is /are correct?

A. 1 and 2 only
B. 1 only
C. 3 only
D. 1, 2 and 3

Ans. D

Sol. If total resistance in parallel circuit is R_T,then

$$\frac{1}{R_T}=\frac{L}{R_1}+\frac{1}{R_2}+\frac{1}{R_3}+\ldots\ldots$$

Now, if a Branch is open, then total resistance increases.

As power $(P_T)=\frac{V^2}{R_T}$, total power decreases with increase in total resistance.

But in parallel circuit, no change in voltage.

27. The problems of the binary-weighted resistor digital to analog convertor (DAC) can be overcome by using

A. a flash DAC
B. a staircase DAC
C. an R-2R ladder DAC
D. an 8-bit binary weighted resistor DAC

Ans. C

Sol. **Weighted resistor DAC**

⇒ in this DAC requires n number of resistors.

⇒ Resistor different value requires that rate 2R, 2^2R, 2^3R ……. 2^nR

⇒To overcome this problem of weighted resistor DAC R-2R ladder resistor DAC is used. Which used only two resistor of size R & 2R.

28. The degree of the differential equation is $\left(\frac{d^3y}{dx^3}\right)^{\frac{4}{5}}=\left(\frac{d^3y}{dx^3}\right)^{\frac{5}{4}}$

A. 8
B. 10
C. 5
D. 9

Ans. D

Sol.

$$\left(\frac{d^3y}{dx^3}\right)^{\frac{4}{5}}=\left(\frac{d^3y}{dx^3}\right)^{\frac{5}{4}}$$

$$\left(\frac{d^3y}{dx^3}\right)^{\frac{5}{4}-\frac{4}{5}}=1$$

$$\left(\frac{d^3y}{dx^3}\right)^{\frac{9}{20}}=1$$

$$\left(\frac{d^3y}{dx^3}\right)^{9}=1$$

29. Low load or friction adjustment in single phase induction type energy meter is done

A. By adjusting position of break magnet
B. By providing holes or slots on rotating disc
C. By using shading loop
D. None of these

Ans. C

Sol. Various compensation in energy meter is given as:

Over friction or creeping: By providing holes or slots on rotating disc.

Low load or friction adjustment: By using shading loop.

Speed adjustment: By adjusting position of break magnet.

Hence, Option (C) is correct.

30. What is the impedance seen by relay A (in Ω) in the below arrangement?

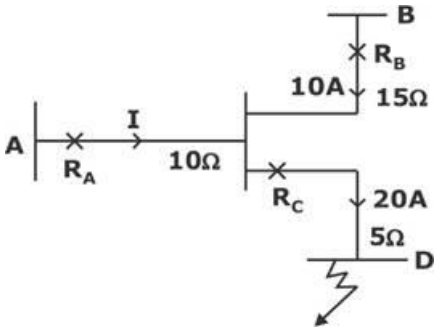

A. 5Ω

B. 20 Ω

C. 25 Ω

D. 10 Ω

Ans. B

Sol.

$$Z_{seen,A} = \frac{V_A}{I_A} = \frac{10(10)+20(5)}{10}$$

$$= \frac{200}{10} = 20\Omega$$

31. In three phase cycloconverters, the reduction factor is given by

A. $\left(\frac{\text{Input frequency}}{\text{Output frequency}}\right)$

B. $\sqrt{\frac{\text{Output frequency}}{\text{Input frequency}}}$

C. $\sqrt{\frac{\text{Input frequency}}{\text{Output frequency}}}$

D. $\frac{\text{Output frequency}}{\text{Input frequency}}$

Ans. D

Sol. $\text{Reduction factor} = \frac{\text{Output frequency}}{\text{Input fequency}}$

32. Which of the following curves represent the electric field due to an infinitely long straight conductor?

A.

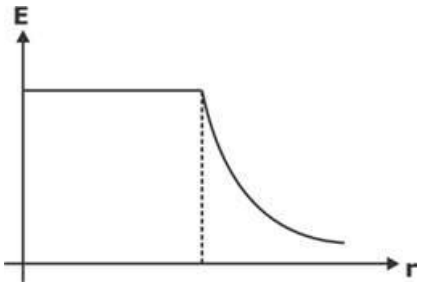

B.

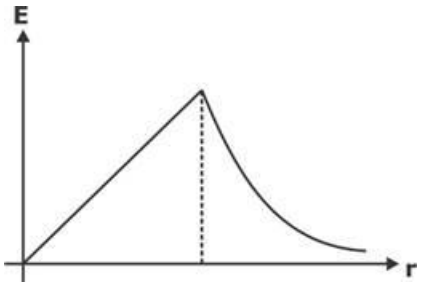

C. 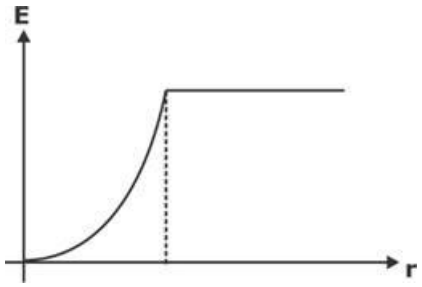

D. 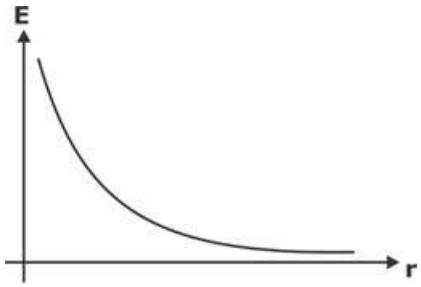

Ans. D

Sol. Electric field due to an infinitely long straight conductor is given by,

$$E = \frac{\lambda}{2\pi\varepsilon_0 r}$$

Where λ is the linear charge density and r is the radius of the cylinder.

$$\Rightarrow E \propto \frac{1}{r},$$

Hence, option (D) is correct.

33. Statement 1 (S1): PD controller improves transient response of system.

Statement 2 (S2): With PD controller, maximum overshoot is increased.

A. Both S1 and S2 are true and S2 is the correct explanation of S1

B. Both S1 and S2 are true and S2 is not the correct explanation of S1

C. S1 is true but S2 is false

D. S1 is false but S2 is true

Ans. C

Sol. With PD controller, damping ratio is increased, so that maximum overshoot is decreased. Hence, PD controller improves transient response of system.

34. In which of the following instructions, no flags are affected?

1) STAX

2) DCR

3) CMA

4) CMC

A. 1 and 4

B. 2 and 3

C. 1 and 3

D. 2 and 4

Ans. C

Sol. STAX : Store accumulator indirect

DCR : Decrement source by 1

CMA : Complement accumulator

CMC : Complement carry

In STAX and CMA instruction, no flags are affected.

In DCR operation, except carry, all flags are affected.

In CMC instruction, the carry flag is modified, no other flags are affected.

35. Which relay is best suited for long distance protection?

A. Impedance relay
B. Reactance relay
C. MHO relay
D. Over-current relay

Ans. C

Sol.

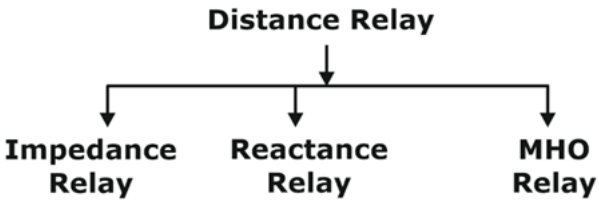

Relay	Uses
Impedance	Medium distance
Reactance	Small distance
MHO/Admittance	Long distance

Hence, for long distance protection of transmission line MHO relay is suited.

36. Which of the following statements is/are correct?

1) Bode plot can be plotted for both minimum and non-minimum phase system.
2) Nyquist plot defines both absolute and relative stability.
3) Bode plot defines absolute stability
4) In Nyquist plot, the variable is the entire s-plane.

A. 1 and 3
B. 2 and 3
C. 1 and 3
D. None of these

Ans. D

Sol. 1. Bode plot can be plotted only for minimum phase system.
2. Nyquist plot defines both absolute and relative stability.
3. Bode plot defines relative stability.
4. In Nyquist plot, the variable is the entire s-plane.

37. The value of the integral $\int_0^{\pi/2} \sin^7 x \cos^5 x \, dx$ is

A. 1/60
B. 1/40
C. 1/120
D. 1/80

Ans. C

Sol.

$$\int_0^{\pi/2} \sin^2 x \cos^5 x \, dx = \frac{(7-1)(7-3)(7-5)\cdot(5-1)(5-3)}{(7+5)(7+5-2)(7+5-4)(7+5-6)(7+5-8)(7+5-10)}$$

$$= \frac{6\times4\times2\times4\times2}{12\times10\times8\times6\times4\times2} = \frac{1}{120}$$

38. Which of the following cores have linear characteristics?

A. Steel core
B. CRGO core
C. Air core
D. None of the above

Ans. C

Sol. Air cores have linear magnetization characteristics i.e., they do not saturate whereas steel core and CRGO core have non-linear magnetization characteristics.

39. Consider the given circuit shown in figure, determine the value of I.

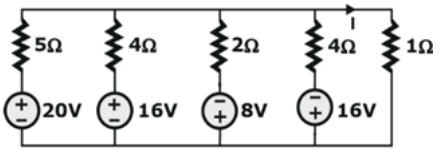

A. 0 A
B. 2 A
C. 3 A
D. 4 A

Ans. A

Sol. By using Millman's theorem

$$V_{th} = \frac{20\times\frac{1}{5}+16\times\frac{1}{4}-8\times\frac{1}{2}-16\times\frac{1}{4}}{\frac{1}{5}+\frac{1}{4}+\frac{1}{2}+\frac{1}{4}}$$

= 0 V

$$R_{th} = \frac{1}{5}+\frac{1}{4}+\frac{1}{2}+\frac{1}{4}$$

R_{th} = 0.833 Ω

$$I = \frac{V_{th}}{R_{th}+R_L} = \frac{0}{0.833+1} = 0A$$

40. Statement (I): If 'A' is scalar field, then its gradient points in the direction of maximum increase of the scalar field (A).

Statement (II): Scalar field gradient is scalar always.

A. Both statement (I) and statement (II) are correct, and statement (II) is correct explanation of statement (I).

B. Both statement (I) and statement (II) are correct, but statement (II) is not correct explanation of statement (I).

C. Statement (I) is correct, but statement (II) is incorrect.

D. Statement (I) is incorrect, but statement (II) is correct.

Ans. C

Sol. option (C) is correct

Statement (II) is incorrect since

Gradient of scalar is always a vector

i.e., $\left\{\nabla A = \frac{\partial A}{\partial x}\hat{i} + \frac{\partial A}{\partial y}\hat{j} + \frac{\partial A}{\partial z}\hat{k}\right\}$

41. Temperature at which antiferromagnetic material converts to paramagnetic material is known as _____ temperature.

A. Curie
B. Curie-Weiss
C. Neel
D. Debye

Ans. C

Sol. Temperature at which antiferromagnetic material converts to paramagnetic material is known as Neel temperature.

42. Corona loss depends on

1. Radius of conductor
2. Spacing between conductors
3. Atmosphere
4. line voltage

A. 1 and 2 only
B. 3 and 4 only
C. 1, 2 and 3 only
D. 1, 2, 3 and 4

Ans. D

Sol. Corona loss is given by peek's formula.

$$P_C = \frac{244}{\delta}(f+25)(V_{ph} - V_d)^2 \sqrt{\frac{r}{D}} \times 10^{-5}\,\text{kW / km / phase}$$

Where, P_c = corona power loss

f = frequency

V_{ph} = phase voltage

V_d = Disruptive voltage

r → Radius of conductor

D → distance between conductors

It also affected by atmosphere, surface irregularity, rough surface, operating voltage, and Air Density factor.

43. For the given op-amp circuit, find the transfer function $\frac{Y(s)}{R(s)}$. if $R_1 = R_2$, $C_1 = C_2$

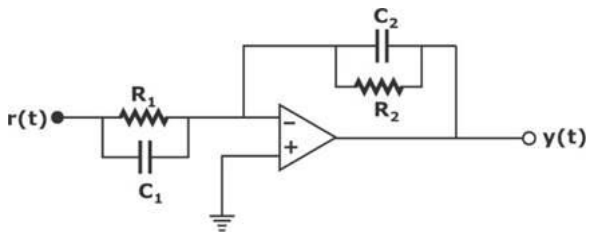

A. 1
B. −2
C. 2
D. −1

Ans. D

Sol. This is an inverting om-amp, hence

$$\frac{y(t)}{x(t)} = \frac{-Z_2}{Z_1}$$

$$\frac{Y(s)}{R(s)} = \frac{-Z_2(s)}{Z_1(s)}$$

$$Z_2(s) = \frac{R_2}{1 + SR_2C_2}$$

$$Z_1(s) = \frac{R_1}{1 + SR_1C_1}$$

$$\frac{Y(s)}{R(s)} = \frac{-R_2}{1 + sR_2C_2} \times \frac{1 + sR_1C_1}{R_1}$$

Here, $R_1 = R_2$, $C_1 = C_2$

$$\frac{Y(s)}{R(s)} = -1$$

44. The differential DC output voltage $V_{0_1} - V_{0_2}$ in the circuit shown is _____ V

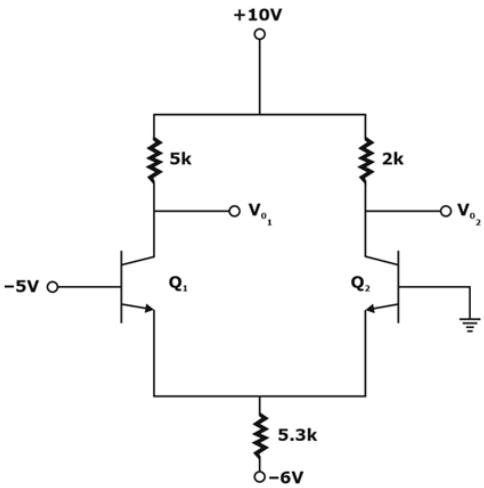

A. 5V

B. 10V

C. 8V

D. 2V

Ans. D

Sol.

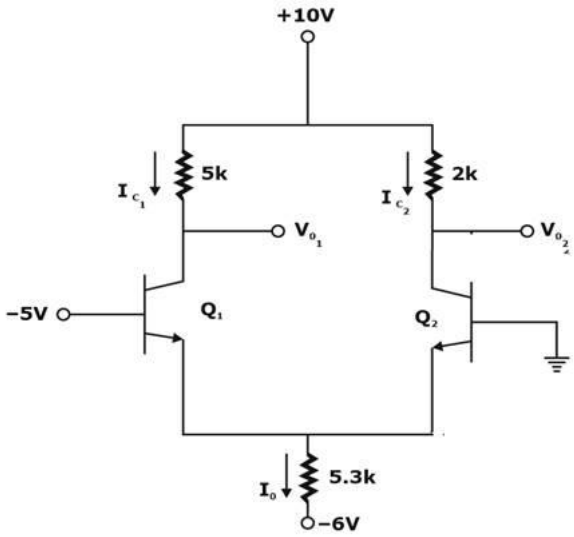

⇒ the base of Q_L is biased with negative voltage hence

$Q_1 \rightarrow$ OFF

$Q_2 \rightarrow$ ON

$\Rightarrow I_{C_1} = 0$

$\Rightarrow V_{0_1} = 10V$

$\Rightarrow V_{E_2} = -0.7V$

$\Rightarrow I_0 = \frac{-0.7V + 6V}{5.3k} = 1mA$

$\Rightarrow V_{0_2} = 10 - 2 \times 1 = 8V$

$\Rightarrow V_{0_1} - V_{0_2} = 10 - 8 = 2V$

45. Consider the following statements about Diamond:

1) Diamond crystal structure is a variant of Zinc blende.

2) Diamond has very high thermal conductivity.

3) Diamond has very high electrical conductivity.

Which of the above statements is/are correct?

A. 1 and 2 only

B. 2 and 3 only

C. 1 and 3 only

D. 1, 2 and 3

Ans. A

Sol. Diamond crystal structure is a variant of Zinc blende in which carbon atoms occupy all positions (both Z_n and S)

Diamond has very high thermal conductivity and very Low electrical conductivity.

46. Symmetrical component of phase a is $I_{a_0} = 0A, I_{a_1} = 12\angle 30°A$ $I_{a_2} = 16\angle 90°A$ then what will be the neutral current?

A. 1.5 ∠30° A

B. 2 ∠30° A

C. 3.12 ∠12° A

D. 0 A

Ans. D

Sol. We know that Neutral current $I_N = I_a + I_b + I_c$

$= \left(I_{a_0} + I_{a_1} + I_{a_2}\right) + \left(I_{b_0} + I_{b_1} + I_{b_2}\right) + \left(I_{c_0} + I_{c_1} + I_{c_2}\right)$

$= 3I_{a_0} + \left(1 + \alpha^2 + \alpha\right)I_{a_1} + \left(1 + \alpha^2 + \alpha\right)I_{a_2}$

We know that $\left(1 + \alpha^2 + \alpha\right) = 0$

So, $I_N = 3I_{a_0}$

$I_N = 3 \times 0 + 0 + 0 = 0A$

Note: always neutral current is 3 times of zero sequence current.

47. The voltage drop across a resistor is 350 V and a current of 25 A flows through it. The uncertainties in measurements are ± 0.8 V and ± 0.3 A respectively. Find the % uncertainty in measurement of power.

A. 1.87%
B. 1.65%
C. 1.22%
D. 1.52%

Ans. C

Sol. Power, P = VI

P = 350 × 25 = 8750 W

Given, w_P = ± 0.8 V and w_I = ± 0.3 A

$$\frac{\partial P}{\partial V} = I = 25\,A$$

$$\frac{\partial P}{\partial I} = V = 350\,V$$

∴ Uncertainty in power = $\sqrt{\left(\frac{\partial P}{\partial V}\right)^2 (w_V)^2 + \left(\frac{\partial P}{\partial I}\right)^2 (w_I)^2}$

$$= \sqrt{(I)^2 \times (0.8)^2 + (V)^2 \times (0.3)^2}$$

$$= \sqrt{(25)^2 \times 0.8^2 + (350)^2 \times 0.3^2}$$

$$= \sqrt{400 + 11025}$$

= ± 106.88 W

% Uncertainty = $\frac{106.88}{8750} \times 100$

= ± 1.22%

48. In a DC machine, armature MMF is

A. Stationary in space
B. Having triangular space distribution
C. Both (a) and (b)
D. Neither (a) Nor (b)

Ans. C

Sol. In a DC machine, armature MMF is stationary in space and has triangular space distribution.

49. Consider the following statements.

1. $\frac{dy}{dx} - xy = x^3$

2. $\frac{dy}{dx} + xy = x^2y^2$

3. $\frac{dy}{dx} + x \sin y = x^3$

Which of the above statements is/are linear?

A. 1 only
B. 2 only
C. 1 and 2
D. 1, 2 and 3

Ans. A

Sol. A differential equation is said to be linear differential equation, If the dependent variable and its differential co-efficient occurring with first degree and they are not multiplied together.

Here x is independent variable and y is dependent variable.

In (2) degree of y = 2 hence NL

In (3) y is inside sin function hence NL

Here y is not a variable.

50. Proximity effect causes _____ in conductor internal reactance.

A. Increase
B. Decrease
C. No change
D. None of the above

Ans. B

Sol. Similar to the skin effect, proximity effect causes current distribution to get affected which ultimately increases the conductor resistance and reduces the self-reactance.

51. For stable systems, which of the following statements are true?

(i) Gain margin and phase margin both are positive.

(ii) Gain cross over frequency > Phase cross-over frequency

A. Only (i)
B. Only (ii)
C. Both (i) and (ii)
D. Neither (i) nor (ii)

Ans. A

Sol. For stable systems,

(i) Gain margin and phase margin both are positive.

(ii) Gain cross over frequency < Phase cross-over frequency.

52. In the torque current characteristics shown, match the current sequence:

(i) Series motor

(ii) Shunt motor

(iii) Cumulative compound motor

(iv) Differential compound motor.

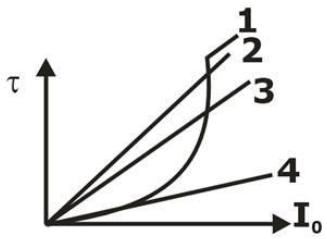

A. 1 – (i) , 2 – (ii), 3 – (iv) , 4 – (iii)
B. 1 – (iv) , 2 – (iii), 3 – (ii) , 4 – (i)
C. 1 – (i) , 2 – (iii), 3 – (ii) , 4 – (iv)
D. 1 – (i) , 2 – (ii), 3 – (iii) , 4 – (iv)

Ans. C

Sol. Same as above

53. Select the correct output (V_o) wave shape for a given input (V_I) in the damping network given below.

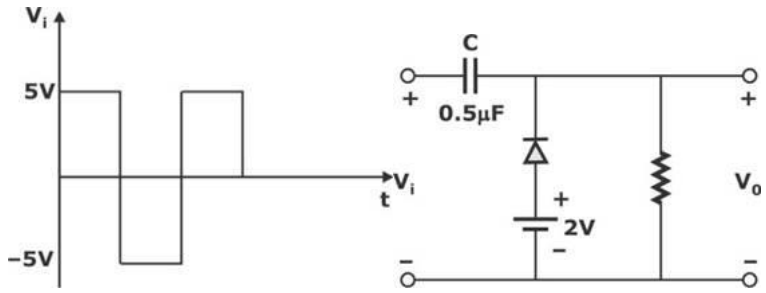

A.
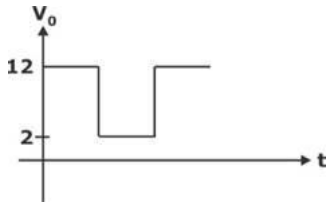

B.
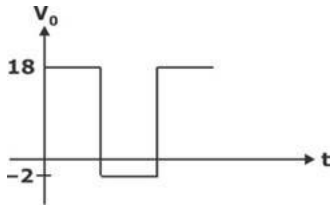

C.
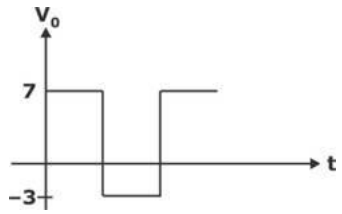

D.
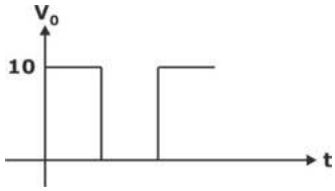

Ans. A

Sol. Apply KVL in negative cycle, diode on

$V_i - 2 - V_C = 0$

V_i maximum voltage

$V_C = V_i - 2$

$V_C = -5 - 2 = -7V$

Now,

$V_0 = V_i - V_C$

For $V_i = +5V$ (positive cycle)

$V_0 = 5 - (-7) = 12V$

For $V_i = -5V$ (negative cycle)

$V_0 = -5 - (-7) = 2V$

54. **Statement I:** In an IC-555 circuit 3 equal resistors are used.

Statement II: In an IC 555 circuit capacitor charges from $\frac{V_{cc}}{3}$ to $\frac{2V_{cc}}{3}$.

A. Both statements are true & statement II is correct explanation of statement I.

B. Both statements are true & statement I is correct explanation of statement II.

C. Statement I is true & statement II is false

D. Statement II is true & statement I is false

Ans. B

Sol. In IC 555 three equal resistors are used

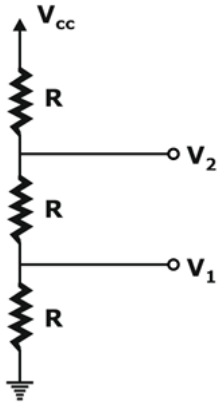

Apply voltage division rule:

$$V_1 = \frac{R}{3R} \times V_{cc} = \frac{V_{cc}}{3}$$

$$V_2 = \frac{2R}{3R} \times V_{cc} = \frac{2V_{cc}}{3}$$

So, capacitor charges from $\frac{V_{cc}}{3}$ to $\frac{2V_{cc}}{3}$

55. Hand tool application uses which of the following motors?

A. AC series motor
B. Shaded pole motor
C. Resistance motor
D. None of the above

Ans. A

Sol. For hand tool applications, AC series motor is used.

So, Option (A) is correct.

56. **Statement (I):** In thyristor, local hot spots will be formed near the gate connection on accounts of high current density.

Statement (II): Rate of rise of anode current is large as compared to the spread velocity of carriers.

A. Both statement (I) and statement (II) are true and statement (II) is correct explanation of statement (I)

B. Both statement (I) and statement (II) are true but statement (II) is not a correct explanation of statement (I)

C. Statement (I) is true but statement (II) is false

D. Statement (I) is false but statement (II) is true

Ans. A

Sol. If the Rate of rise of anode current is large as compared to the spread velocity of carriers across the cathode junction, local hot spots will be formed near the gate connection on accounts of high current density. This increases the junction temperature and may damage the device.

57. Consider two long parallel conductors placed at a certain distance apart from each other. The current carried by one wire is doubled and the current carried by the other wire is tripled. Also, the distance between them is reduced to half. Find the % change in force per unit length between the two wires.

A. 1200
B. 1100
C. 1000
D. 900

Ans. B

Sol. Force per unit length between two conductors is given by,

$$\frac{F}{\ell} = \frac{\mu_0 I_1 I_2}{2\pi d}$$

$$\Rightarrow \quad F \propto = \frac{I_1 I_2}{d}$$

$$\therefore \quad \frac{F'}{F} = \frac{I_1'}{I_1} \times \frac{I_2'}{I_2} \times \frac{d}{d'}$$

Given, $I_1' = 2I_1$, $I_2' = 3I_2$ and $d' = \frac{d}{2}$

$$\Rightarrow \frac{F'}{F} = \frac{2I_1}{I_1} \times \frac{3I_2}{I_2} \times \frac{d}{d/2}$$

$\Rightarrow F' = 12F$

% Change = $\left(\frac{F' - F}{F}\right) \times 100$

$$= \frac{12F - F}{F} \times 100$$

= 1100%

58. Consider two meters A and B. Meter A has a range of (0 – 150) V and multiplier resistance of 50 kΩ. Meter B has a range of (0 – 500) V and a multiplier resistance of 180 kΩ. Meter A and B have basic meter resistances of 1 kΩ and 2 kΩ respectively. Determine which meter is more sensitive?

A. A is more sensitive than B
B. B is more sensitive than A
C. Both meters have same sensitivity
D. None of these

Ans. B

Sol. Sensitivity, $S = \frac{R + R_m}{V}$

For Meter A,

R = 50 kΩ

R_m = 1 kΩ

V = 150 V

$$\Rightarrow \quad S_A = \frac{50\,k\Omega + 1\,k\Omega}{150}$$

S_A = 340 Ω/V

For Meter B,

R = 180 kΩ

R_m = 2 kΩ

V = 500 V

$$\Rightarrow S_B = \frac{180\,k\Omega + 2\,k\Omega}{500}$$

S_B = 364 Ω/V

∴ $S_B > S_A$

59. In SCR, if the reverse voltage is increased above critical breakdown level then, avalanche occurs at junction.

A. J1 only
B. J2 and J3
C. J1 and J3
D. J3 only

Ans. C

Sol. In SCR, if the reverse voltage is increased above critical breakdown level then, avalanche occurs at junction at J1 and J3.

60. Two signals $x_1(t)$ and $x_2(t)$ with maximum frequencies 10 Hz and 20 Hz respectively are added together. The resultant signal is denoted as y(t) and is sampled at 50 Hz, then it is

A. Over sampling
B. Nyquist sampling
C. Under sampling
D. Bandpass sampling

Ans. A

Sol. $y(t) = x_1(t) + x_2(t)$

$Y(f) = X_1(f) + X_2(f)$

∴ Maximum frequency of Y(f) = Max (10, 20)

= 20 Hz

Thus, Nyquist frequency = 2 × 20 Hz = 40 Hz

Given, Sampling frequency = 50 Hz

Since, the sampling frequency is greater than Nyquist rate,

Therefore, type of sampling is over sampling.

61. If R changed to 3Ω then what is change in current flowing through R.

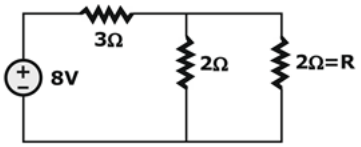

A. 0.478
B. 0.238
C. 0.516
D. 0.258

Ans. B

Sol.

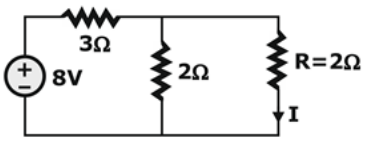

$$I = \frac{1}{2} \times \frac{8}{3+(2||2)} = 1A$$

Now according to compensation theorem

$V_s = \Delta Z.I$

$= (3 - 2) \times 1$

Short circuit vorlage source.

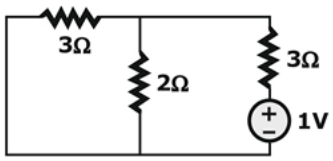

$$R_{eq} = 3 + (3||2)$$

= 4.2 V

$$I = \frac{1}{4.2}$$

= 0.238 A

62. An energy meter rated as 5 A, 230 V makes 480 revolutions per kWh. In a test at full load, unity power factor, it makes 6 revolutions in 64 seconds, then which of the following statement is correct?

A. The meter runs slower and error is 38.8%
B. The meter runs faster and error is 22.5%
C. The meter runs slower and error is 225.5%
D. The meter runs faster and error is 38.8%

Ans. A

Sol. Energy consumed in 64 second,

E = 230 × 5 × 64 watt-sec

$$= \frac{230 \times 5 \times 64}{3600 \times 1000}$$

= 0.0204 kWh

Meter constant, k = 480 rev/kWh

So, Number of revolutions = 480 × 0.0204 = 9.813 rev.

This means, it should make 9.813 revolutions.

But it makes 6 revolutions.

$$\% \text{ Error } = \frac{N_2 - N_1}{N_1} \times 100$$

$$= \frac{(6 - 9.813)}{9.813} \times 100$$

$$= \frac{-3.813}{9.813} \times 100$$

= −38.86%

Negative sign indicates that meter runs slower.

63. In the first order low pass filter, which one of the following statements is not correct?

A. It has the maximum gain at frequency of 0 Hz

B. At higher cutoff frequency, the gain falls to 0.707 times the maximum gain.

C. For frequency greater than higher cutoff frequency, the gain decreases at a constant rate of −20 dB/decade.

D. It has the maximum gain in stop band.

Ans. D

Sol.

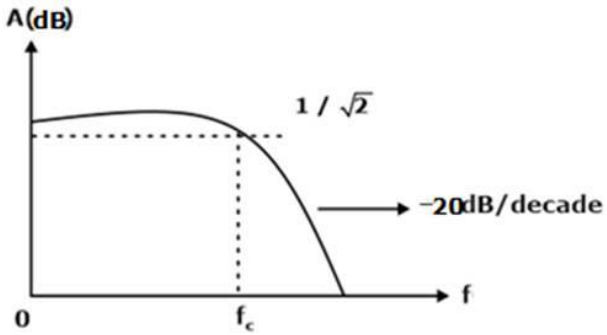

First order low Pass filter:

A. It has the maximum gain at frequency of 0 Hz. B. At higher cutoff frequency, the gain falls to 0.707 times the maximum gain.

C. For frequency greater than higher cutoff frequency, the gain decreases at a constant rate of −20 dB/decade.

64. Which of the following magnetic materials have high remanence and large coercivity?

A. Diamagnetic material

B. Hard magnetic material

C. Soft magnetic material

D. None of the above

Ans. B

Sol. Hard magnetic material has large hysteresis loop area, So, hysteresis loss is also more, remanence is high and coercivity is large.

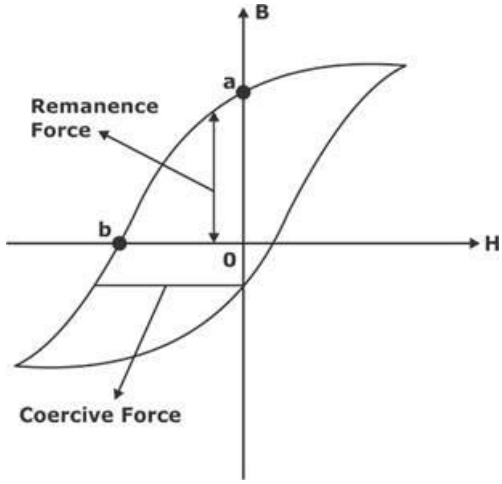

65. Find the reading of moving iron Ammeter in the circuit shown below, where $v_1(t)$ = 10 sint V and v_2 (t) = $10\sqrt{5}$ sin2t V.

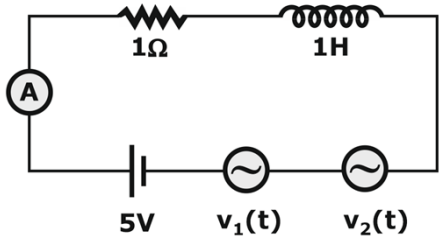

A. 5 A

B. 10 A

C. $10\sqrt{2}$ A

D. $5\sqrt{2}$ A

Ans. B

Sol. Since there are different frequency sources present in the circuit, so superposition theorem should be used to find the response.

(1) When only V_1 = 10 sint is operating,

Angular frequency, ω = 1 rad/sec

Inductive reactive, $X_L = \omega L$

$\therefore X_L = 1 \times 1 = 1\Omega$

Impedance, Z = 1 + j1

$$|Z| = \sqrt{1^2 + 1^2} = \sqrt{2}\Omega$$

$$\therefore I_{1rms} = \frac{V_{1rms}}{|Z_1|} = \frac{10/\sqrt{2}}{\sqrt{2}}$$

$\Rightarrow I_{1\,rms} = 5A$

(2) When only $V_2 = 10\sqrt{5}$sin 2t is operating,

Angular frequency, ω = 2rad/sec

$X_L = \omega L = 2 \times 1 = 2\ \Omega$

Z = 1 + j2

$$|Z| = \sqrt{1^2 + 2^2} = \sqrt{5}\Omega$$

$$\therefore I_{2rms} = \frac{V_{2rms}}{|Z_2|} = \frac{\frac{10\sqrt{5}}{\sqrt{2}}}{\sqrt{5}} \Rightarrow I_{2_{rms}} = 5\sqrt{2}A$$

(3) When only 5V(DC) is operating,

$\omega = 0, \therefore X_L = 0$

Z = 1Ω

$$I_3 = \frac{V}{Z} = \frac{5}{1} = 5A$$

$\therefore$ Ammeter reading = $\sqrt{I_1^2 + I_2^2 + I_3^2} = \sqrt{5^2 + (5\sqrt{2})^2 + 5^2}$ = 10 A

66. Consider the circuit shown in figure below the open circuit transfer impedance Z_{21} of the two port network is

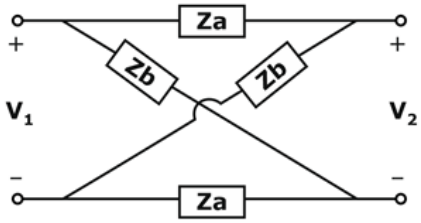

A. $\frac{(Z_a - Z_b)}{2}$

B. $\frac{(Z_b - Z_a)}{2}$

C. $\frac{(Z_a + Z_b)}{2}$

D. $Z_a + Z_b$

Ans. B

Sol.

$$Z_{21} = \left.\frac{V_2}{I_1}\right|_{I_2=0}$$

Re-draw the circuit.

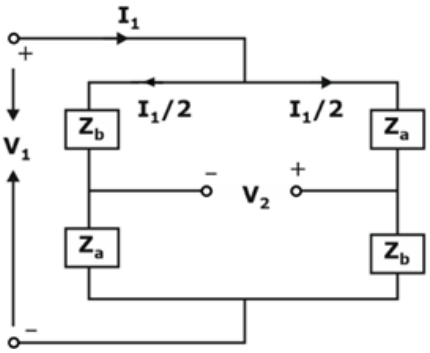

Apply KVL to the inner loop

$$V_2 + Z_a \times \frac{I_1}{2} - Z_b \times \frac{I_1}{2} = 0$$

$$V_2 = \frac{(Z_B - Z_a)}{2} I_1$$

$$\frac{V_2}{I_1} = \left(\frac{Z_b - Z_a}{2}\right) = Z_{21}$$

So, answer B will be correct.

67. A $4\frac{1}{2}$ digit voltmeter is used to measure the voltage value of 0.3861 V on a 1 V range. It would be displayed in the panel as

A. 0.3861

B. 00.386

C. 000.38

D. .38610

Ans. A

Sol. Resolution over 1 V range,

$$= \frac{1}{20000} \times 1\,V = .0001\ V/division$$

Since, it can only display only 5 digits,

So, resolution is approximately .0001

So, $4\frac{1}{2}$ digit voltmeter will display 0.3861 over 1 V range.

68. A sinusoid's having peak amplitude of 0.5V is applied to the op-amp circuit shown in figure. If the op-amp provides a slew rate of 1V/n sec and a gain of 4, then the highest input frequency for which no slewing occurs is _____ MHz.

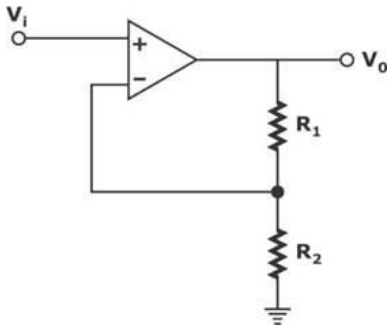

A. 89.5 B. 79.6

C. 68.2 D. 70.6

Ans. B

Sol.

Let, $V_0 = V_m \sin\omega t$

$$S.R = \begin{matrix} 1 - \bar{B}\bar{D} \\ 2 - CD \\ 3 - \end{matrix}$$

$= |\omega V_m \cos \omega t|_{max}$

$= \omega V_m$

$S.R = 2\pi F_m V_m$

Here, $V_m = 4 \times 0.5$ V

$S.R = 4 \times 0.5 \times 2\pi F_m = 1V / n\ sec$

$F_m = 79.6$ MHz

69. Octal equivalent of $(11111111)_2$ is

A. 377 B. 370

C. 277 D. 256

Ans. A

Sol.

$$(11111111)_2 = (\underbrace{011}\ \underbrace{111}\ \underbrace{111})_2$$

$$\downarrow \quad \downarrow \quad \downarrow$$

$$(3 \quad 7 \quad 7)$$

$$\Downarrow$$

$$(377)_8$$

70. Which of the following in NOT the correct properties of ceramics?

A. High strength
B. High Hardness
C. Low creep resistance
D. Low toughness

Ans. C

Sol. Properties of ceramic are:

- High strength
- High hardness
- High creep resistance
- Low toughness

71. The figure shows a half-wave rectifier. The diode D is ideal the average steady state current (in mA) through the diode is approximately.

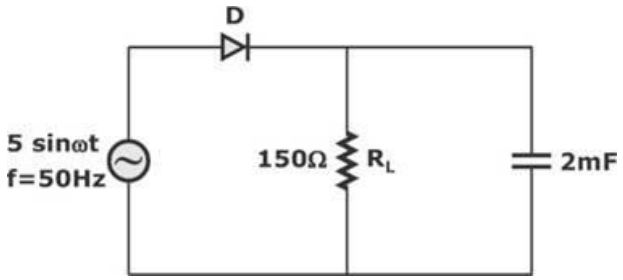

A. 32.25
B. 64 .50
C. 16.25
D. 38.25

Ans. A

Sol. $V_0 = I_{DC} \times R_L$

$$I_{DC} = \frac{V_{DC}}{R_L},$$

$$V_{DC} = V_m - \frac{V_r}{2},$$

$$V_r = \frac{I_{DC} \times T}{C}$$

$$V_{DC} = V_m - \frac{I_{DC}}{2fC}$$

$$I_{DC} \times R_L = V_m - \frac{I_{DC}}{2fC}$$

$$I_{DC} \times \left[R_L + \frac{1}{2fC}\right] = V_m$$

$$I_{DC} = \frac{V_m}{R_L + \frac{1}{2fC}}$$

$$I_{DC} = \frac{5}{150 + \frac{1}{2 \times 50 \times 2 \times 10^{-3}}}$$

= 32.25 mA

72. 'Dead Zone' is defined as

A. Initial warm up time of an instrument

B. largest change in Input quantity, for which there is no instrument output

C. Respond time of an instrument

D. Unmeasured instrument reading beyond instrument maximum range

Ans. B

Sol. Dead zone is defined as the largest change in the physical variable to which instrument does not respond.

73. A surge travel to the end of a long OH line of length 'ℓ' km takes time of 3 msec. What will be the length of transmission line?

A. 1000 km

B. 600 km

C. 500 km

D. 900 km

Ans. D

Sol. Speed of light = speed of surge = 3×10^8 m/s

Length = velocity × time

$= 3 \times 10^8 \times 3 \times 10^{-3}$

$= 9 \times 10^5$ m = 900 km

74. What is the true fact regarding Ward-Leonard System of Speed Control of DC motor?

A. This system has inherent regenerative braking capacity.

B. Smooth speed control of DC motors over a wide range in one direction is possible.

C. Installation and maintenance cost is quite low.

D. Both A & C

Ans. A

Sol. By varying the applied voltage to the armature, the speed of the DC motor can be controlled and based on this principle Ward-Leonard Method works.

The speed of a DC motor is controlled by varying the voltage fed to the generator field windings, which varies the output voltage of the generator. The varied output voltage will change the voltage of the motor, since they are connected directly through the armature. Consequently, changing the voltage fed to generator field windings will control the speed of the motor.

Higher initial cost and maintenance cost due to use of two additional machines of the same rating as the main motor.

Smooth speed control over a wide range in both directions is possible and has inherent regenerative braking capacity.

75. In an auto-transformer, power is transferred, through

A. Conduction process only

B. Induction process only

C. Both conduction and induction processes

D. Mutual coupling

Ans. C

Sol. In transformer there is no direct connection between primary and secondary. So the power only transferred through induction. But in Auto transformer there is a conductive path between primary and secondary. So power transferred through both conduction and induction.

76. Which of the following carbohydrates is the main component of honey?

A. Sucrose
B. Glucose
C. Fructose
D. Lactose

Ans. C

Sol. 1) The sweetest sugar, fructose or Levulose is the major component of honey.

2) Honey is composed of 82% carbohydrates and 17% water. The carbohydrates present are the monosaccharides fructose (38.2%) and glucose (31%); and disaccharides sucrose, maltose, dextrose are the other constituents of honey.

77. Which of following is ISRO and NASA combined project?

A. IRNSS
B. BHUWAN
C. NISAR
D. MANGALYAAN

Ans. C

Sol. • **The *NASA-ISRO* Synthetic Aperture Radar (NISAR) is combine project of NASA and ISRO.**

• It is based on developing a dual efficiency earth observation satellite.

• The satellite will be the first radar imaging satellite to use dual frequencies.

78. Soil formed by leaching and oxidation is

A. Black soil
B. Laterite soil
C. Red soil
D. Montane soil

Ans. B

Sol. Laterite is a soil and rock type rich in iron and aluminium, and is commonly considered to have formed in hot and wet tropical areas. Nearly all laterites are of rusty-red coloration, because of high iron oxide content.

79. Virupaksha Temple is situated in which of the following districts of Karnataka?

A. Bagalkot
B. Chikkaballapur
C. Ballari
D. Bidar

Ans. C

Sol. • **Virupaksha Temple is situated in Ballari**.

• It is **part of the Group of Monuments at Hampi, designated as a UNESCO World Heritage Site**.

• It was **built by Lakkan Dandesha** and is **dedicated to Lord Virupaksha, a form of Shiva**.

• He had been **considered the most sacred sanctuary over the centuries**.

• It consists of a **sanctum**, **three ante chambers**, **a pillared hall** and **an open pillared hall**.

• It is the **only well preserved** and **maintained temple in Hampi to date** and It has a **brick superstructure** and **a stone base**.

80. Section _____ of the Indian Penal Code deals with 'disobedience to quarantine rule'.

A. 217 B. 264

C. 246 D. 271

Ans. D

Sol. • **Section 271 of the Indian Penal Code deals with 'disobedience to quarantine rule'**.

• The **punishment for IPC 271** is **6 Months jail or Fine or Both**.

• **Section 246** of the IPC **fraudulently or dishonestly performs on any coin any operation which diminishes the weight**.

• **Section 264** of the IPC is related to the **Fraudulent use of false instruments for weighing**.

• **Article 217** of the IPC is related to **Public servants disobeying the direction of law with intent to save a person from punishment or property from forfeiture**.

• **Quarantine** is a **restriction on the movement of people**, **animals** and **goods** which is **intended to prevent the spread of disease or pests**.

81. Which of the following cities has become the 31st district of Karnataka?

A. Shimoga B. Vijayanagara

C. Bijapur D. Bellary

Ans. B

Sol. * Vijayanagara has officially become the 31st district of Karnataka in February 2021.

* Hosapete is made the headquarters of this district.

* Vijayanagara was the capital city of the historic Vijayanagara Empire.

* Harihara I and Bukka I was the founder of this historical city.

82. Lt. Governor of Delhi is appointed by which of the following?

A. Chief Minister of Delhi B. Prime Minister of India

C. President of India D. Parliament

Ans. C

Sol. The **Lieutenant Governor of Delhi** is appointed by the **President of India**.

• The **Lieutenant Governor of Delhi** is the constitutional head of the National Capital Territory of Delhi.

• The post was first established in **September 1966**, when **The Delhi Administration Act, 1966** came into effect.

83. Where is the Palace of Birbal located?

A. Fatehpur Sikri B. Gwalior

C. Bhopal D. Agra

Ans. A

Sol. • Birbal's Palace is one of the important monuments in **Fatehpur Sikri** and is the residence of Raja Birbal.

• It was built in **1571** and is believed to be part of the Imperial Harem and housed Akbar's senior queens, Ruqayya Begum and Salima Begum.

• Birbal was Akbar's Hindu Prime Minister.

• He was one of the most trusted persons and was also one of the Navratnas or Nine Jewels in Akbar's court.

84. Which ministry has released draft National Air Sports Policy (NASP) for public feedback?

A. Ministry of Civil Aviation
B. Ministry of Youth Affairs and Sports
C. Ministry of Renewable Energy
D. Ministry of Housing and Urban Affairs

Ans. A

Sol. • The Ministry of Civil Aviation has released draft National Air Sports Policy (NASP) for public feedback.

• As per an official release issued by the ministry the policy seeks to leverage India's potential for air sports and places a strong focus on ensuring international best practices in safety.

• The vision of the policy is to make India one of the top air sports nations by 2030.

85. Articles 315 to 323 in Part XIV describes which of the following?

A. Public Service Commission
B. Election
C. Services
D. Right to property

Ans. A

Sol. • **Articles 315** to **323** in **Part XIV**of the Constitution of India provides for the establishment of **Public Service Commission** for the Union and a Public Service Commission for each State.

86. Union Minister Dr Jitendra Singh launched the Web Portal for PM's Excellence Award, that is being awarded for which sector?

A. Entrepreneurship
B. Sports
C. Public Administration
D. Education

Ans. C

Sol. • Government of India has instituted "The Prime Minister's Awards for Excellence in 2006.

• The award is being awarded for excellence in Public Administration" - to acknowledge, recognize and reward the extraordinary and innovative work done by Districts/ Organizations of the Central and State Governments.

• Recently, Union Minister of State Dr Jitendra Singh today launched the Web Portal for PM's Excellence Award.

• PM's Award for Excellence in Public Administration portal for the year 2021-2022 is www.pmawards.gov.in.

87. Which of the following is NOT in Karnataka?

A. Mysore Palace
B. Bannerghatta National Park
C. Hampi
D. Duduma Waterfall

Ans. D

Sol. • **Duduma Waterfall is not in Karnataka**.

• It is **situated on the border of the Koraput** and **Visakhapatnam districts of India**.

• This **horsetail type waterfall is 175 metres in height** and is **formed by the Machkund river**.

• It has **two sub-waterfalls**, **one on the Odisha side** and the **other on the Andhra Pradesh side**.

• **Mysore Palace** is a **historical palace** and the **royal residence at Mysore in the Indian state of Karnataka**.

• **Bannerghatta National Park** was **founded in 1970** and **declared as a national park in 1974**.

• **Hampi** is a **UNESCO World Heritage Site located in east-central Karnataka**.

88. Who presided over the INC's Lucknow Session in 1916?

A. Ambica Charan Majumdar
B. Annie Besant
C. Mahatma Gandhi
D. Sardar Vallabhbhai Patel

Ans. A

Sol. Lucknow Session in 1916 was presided by **Ambica Charan Majumdar**.

• In this session, **moderates** and **extremists** came together for the first time since **Surat split 1907**.

89. Ahar, Balathal and Gilund are ancient Chalcolithic cultural sites found in which state?

A. Bihar
B. Rajasthan
C. Himachal Pradesh
D. Gujrat

Ans. B

Sol. • Ahar, Balathal and Gilund are ancient Chalcolithic cultural sites found in Rajasthan.

• After Neolithic period, Chalcolithic culture emerged in which had developed human settlements and initiated used of metal.

• Chalcolithic period is characterised by painted ceramic, specialised blade and flake industry, copper and bronze tools etc.

• Other important settlements of this period were-

1. Navdatoli, Eran and Nagada in Malwa Region
2. Rangpur and Ghelo sites in Gujrat.

90. Which city names means 'The town of Lord Anantha'?

A. Cuttack
B. Tiruchirappalli
C. Vishakhapattanam
D. Thiruvananthapuram

Ans. D

Sol. • **Thiruvananthapuram** means the **city of Lord Anantha**, the chief deity at the popular **Sri Padmanabhaswamy Temple**.

• Thiruvananthapuram is commonly known by its former name Trivandrum.

• It is the capital of **Kerala**.

• This city was officially referred to as **Trivandrum** until **1991**.

91. Which one of the following is not an instrument of credit control in India?

A. Rationing of credit
B. Direct Act ion
C. Open Mark et operations
D. Variable cost reserve ratios

Ans. D

Sol. • **Variable cost reserve ratios** are not an instrument of qualitative credit control in India instead variable cash reserve ratio is an instrument of quantitative credit control.

• It indicates the minimum amount which the commercial banks have to keep with the central bank which can be increased or decreased for purpose of credit control.

92. Which one of the following is an example for Non-Banking Financial institution?

A. RBI
B. SBI
C. IOB
D. LIC

Ans. D

Sol. A non-bank financial institution (NBFI) is a financial institution that does not have a full banking license or is not supervised by a national or international banking regulatory agency.

93. Who took oath as the 19th Governor of Karnataka?

A. Thawarchand Gehlot
B. Mangubhai Chhaganbhai Patel
C. Satyadev Narayan Arya
D. Ramesh Bais

Ans. A

Sol. • **Former Union Minister Thawarchand Gehlot took oath as the 19th Governor of Karnataka on July 11, 2021.**

• He has replaced Vajubhai Vala.

• He is also the first person, serving as the Governor of Karnataka from Madhya Pradesh.

• He also served as the Minister for Social Justice and Empowerment from 2014 to 2021.

• He was also the Leader of the House in the upper house of Indian Parliament.

• Currently, **B.S. Yediyurappa** is serving as the 19th chief minister of Karnataka.

94. Who is known as the 'Father of Email'?

A. Larry Page
B. Alan Turing
C. Raymond Tomlinson
D. Elon Musk

Ans. C

Sol. • Raymond Tomlinson is considered as the 'Father of Email'.

• He was a pioneering American computer programmer who implemented the first email program on the **ARPANET** system, the precursor to the Internet, in **1971.**

• He is internationally known and credited as the **inventor** of **email.**

95. Delhi Ridge is also known as _____.

A. Heart of City
B. Lungs of City
C. Life of City
D. None of the above

Ans. B

Sol. The **Delhi Ridge** is said to be the **green lungs for the city** and protects Delhi from the **hot winds of the deserts** of **Rajasthan** to the **west**.

• **Delhi Ridge**, sometimes simply called **The Ridge**, is a ridge in the National Capital Territory of Delhi in India

• The ridge is a northern extension of the ancient **Aravalli Range**, some **1500 million years** old (compared to just 50 million for the Himalaya).

96. The force exerted by a magnet is an example of _____.

A. Non-contact force
B. Muscular force
C. Contact force
D. Electrostatic force

Ans. A

Sol. • The force exerted by a magnet is an example of Non-contact force.

• A non-contact force is a force which acts on an object without coming physically in contact with it.

• The most familiar example of a non-contact force is gravity, which confers weight. In contrast a contact force is a force applied to a body by another body that is in contact with it.

97. Which country becomes the 102nd member of the International Solar Alliance (ISA)?

A. Cuba
B. Barbados
C. Jamaica
D. Antigua and Barbuda

Ans. D

Sol. • The Caribbean nation of Antigua and Barbuda joined the International Solar Alliance (ISA) as the 102nd member by signing the International Solar Alliance Framework Agreement, the India-led global green energy initiative.

• The Prime Minister of Antigua and Barbuda, Gaston Browne signed the framework agreement in the presence of Indian High Commissioner Dr K. J. Srinivasa to catalyze global energy transition through a solar-led approach.

• K. J. Srinivasa became the High Commissioner of India to Guyana, Antigua and Barbuda, St. Kitts and Nevis, and the 15-member CARICOM (Caribbean Community and Common Market) in 2019.

98. Panchayati Raj system is based on the principle of

A. Centralisation
B. Decentralisation
C. Both of these
D. None of these

Ans. B

Sol. The Panchayat raj is a South Asian political system found mainly in the nations of India, Pakistan, Bangladesh and Nepal. It is the oldest system of local government in the Indian subcontinent. The word raj means "rule" and panchayat means "assembly" (ayat) of five (panch). Traditionally panchayats consisted of wise and respected elders chosen and accepted by the local community. However, there were varying forms of such assemblies. Traditionally, these assemblies settled disputes between individuals and between villages.

The leader of the panchayat was often called the mukhiya or sarpanch, an elected or generally acknowledged position. The modern Panchayati Raj of India and its gram panchayats are not to be confused with either the traditional system or with the extra-constitutional khap panchayats (or caste panchayats) found in some parts of northern India.

Mahatma Gandhi advocated panchayat raj as the foundation of India's political system. It would have been a decentralised form of government where each village would be responsible for its own affairs. The term for such a vision was Gram Swaraj ("village self-governance"). Instead,

India developed a Difficultly centralised form of government. However, this has been moderated by the decentralisation of several administrative functions to the local level, empowering elected gram panchayats. There are significant differences between the traditional Panchayati raj system, that envisioned by Gandhi, and the system formalised in India in 1992.

99. Who has been appointed as the president of the US-India Business Council (USIBC)?

A. Ajay Kumar Chaudhary
B. Atul Keshap
C. Ashok Elluswamy
D. Vinod Kannan

Ans. B

Sol. • Atul Keshap, a former US diplomat who headed the US embassy in New Delhi as Chargé d'Affaires , was named the president of the US-India Business Council (USIBC).

• He will replace Nisha Biswal, who has been appointed the U.S. Chamber of Commerce's Senior Vice President of International Strategy and Global Initiatives and South Asia.

• Mr. Kehsap was also previously the U.S. Ambassador to Sri Lanka and the Maldives. He was posted to India in the 2005-2008 period and more recently in 2021 as Chargé d'Affaires.

100. The movement that spread in Karnataka to protest tree felling was

A. Chipko
B. Kaiga
C. Appiko
D. Nandikur

Ans. C

Sol. The Appiko Movement is trying to save the Western Ghats by spreading its roots all over southern India. The movement's objectives can be classified into three major areas. First, the Appiko Movement is struggling to save the remaining tropical forests in the Western Ghats. Second, it is making a modest attempt to restore the greenery to denuded areas. Third, it is striving to propagate the idea of rational utilization in order to reduce the pressure on forest resources. To save, to grow and to use rationally - popularly known in Kannada as Ubsu ("save"), Belesu ("grow") and Balasu ("rational use") - is movement's popular slogan.

So the correct option is C.

****