05/AE/C/PT-2018

Serial No.

Candidate's Roll Number

Question Booklet Series

Question Booklet

B

GENERAL PAPER

Time Allowed : 3 Hours

Maximum Marks : 150

Read the following instructions carefully before you begin to answer the questions.

IMPORTANT INSTRUCTIONS

1. This Question Booklet contains **150** questions in all.
2. **All** questions carry equal marks.
3. Attempt **all** questions.
4. **Immediately after commencement of the examination, you should check up your Question Booklet and ensure that the Question Booklet Series is printed on the top right-hand corner of the Booklet. The Booklet contains 23 printed pages and no page or question is missing or unprinted or torn or repeated. If you find any defect in this Booklet, get it replaced immediately by a complete Booklet of the same series.**
5. You must write your Roll Number in the space provided on the top of this page. Do not write anything else on the Question Booklet.
6. An OMR Answer Sheet will be supplied to you separately by the Invigilator to mark the answers. **You must write your Name, Roll No. and other particulars on the first page of the OMR Answer Sheet provided, failing which your OMR Answer Sheet will not be evaluated.**
7. You will encode your **Roll Number** and the **Question Booklet Series A, B, C or D** as it is printed on the top right-hand corner of this Question Booklet with Black/Blue ballpoint pen in the space provided on **Page–2** of your OMR Answer Sheet. **If you do not encode or fail to encode the correct series of your Question Booklet, your OMR Answer Sheet will not be evaluated correctly.**
8. Questions and their responses are printed in English only in this Booklet. Each question comprises **four** responses—(A), (B), (C) and (D). You are to select ONLY ONE correct response and mark in your OMR Answer Sheet. In case you feel that there are more than one correct response, mark the response which you consider the best. In any case, choose ONLY ONE response for each question. Your total marks will depend on the number of correct responses marked by you in the OMR Answer Sheet.
9. In the OMR Answer Sheet, there are **four** circles—Ⓐ, Ⓑ, Ⓒ and Ⓓ against each question. To answer the questions you are to **mark with Black/Blue ballpoint pen** ONLY ONE circle of your choice for each question. Select one response for each question in the Question Booklet and mark in the OMR Answer Sheet. If you mark more than one answer for one question, the answer will be treated as wrong. **Any erasure or change is not allowed.**
10. You should not remove or tear off any sheet from the Question Booklet. You are not allowed to take this Question Booklet and the OMR Answer Sheet out of the Examination Hall during the examination. **After the examination has concluded, you must hand over your OMR Answer Sheet to the Invigilator.** Thereafter, you are permitted to take away the Question Booklet with you.
11. Failure to comply with any of the above instructions will render you liable to such action or penalty as the Commission may decide at their discretion.

SEAL

1. 'Sagar Vani' sometimes in news is a/an
   (A) integrated information dissemination system
   (B) space program to study the ocean
   (C) floating dock established in Indian Ocean
   (D) program to extract oil from the ocean floor

2. Which of the following is ***not*** a language for computer programming?
   (A) BASIC (B) COBOL
   (C) WINDOWS (D) PASCAL

3. Which of the following are used in mobile communication system?
   (A) Microwaves
   (B) Sound waves
   (C) Ultrasonic waves
   (D) X-rays

4. Non-metal iodine is used
   (A) for purification of soil
   (B) for purification of water
   (C) for vulcanization of rubber
   (D) to make antiseptic solution

5. 'Project 75' sometimes in news is related to
   (A) Indian space program
   (B) Indian Navy's submarine program
   (C) anti-tank guided missile program
   (D) program to control pollution in 75 cities of India

6. 'Project Sunshine' aims to combat which of the following?
   (A) Infant death
   (B) TB
   (C) Malaria
   (D) AIDS

7. Ozone layer is located in
   (A) thermosphere
   (B) mesosphere
   (C) stratosphere
   (D) troposphere

8. Which of the following processes is used to treat contaminated media by altering environmental conditions to simulate growth of microorganism?
   (A) Bioaccumulation
   (B) Bioaugmentation
   (C) Biodegradation
   (D) Bioremediation

9. The IC-chip used in computers is made of
   (A) silicon
   (B) chromium
   (C) silica
   (D) iron oxide

10. The headquarters of 'International Solar Alliance' is located in

(A) Paris (B) Bonn

(C) Haryana (D) Bihar

11. The World Congress on Information Technology (WCIT) was recently held in India. It was organized by

(A) NASSCOM

(B) CSIR

(C) NIIT

(D) IIT

12. Recently ISRO has entered into Technology Transfer Agreement with which of the following companies?

(A) NTPC (B) BHEL

(C) L & T (D) ONGC

13. 'Science City' in India are developed by

(A) the Ministry of Science and Technology

(B) the Ministry of Commerce and Industry

(C) the Ministry of Defence

(D) the Ministry of Culture

14. Bureau of Energy Efficiency is an agency of the Government of India under

(A) the Ministry of Science and Technology

(B) the Ministry of Commerce and Industry

(C) the Ministry of Power

(D) the Ministry of Agriculture

15. India-based neutron observatory, was recently in news, will be established in

(A) Tamil Nadu

(B) Andhra Pradesh

(C) Bihar

(D) Uttar Pradesh

16. Which among the following is ***not*** a part of Indian Antarctic Program?

(A) Dakshin Gangotri

(B) Maitri

(C) Bharati

(D) Himsagar

17. Which phenomenon of optics is used in optical fibre communication?

(A) Diffraction

(B) Reflection

(C) Total internal reflection

(D) Interference

18. 'Red Biotechnology' is related to

(A) Marine engineering

(B) Agricultural science

(C) DNA

(D) Oil and gas engineering

19. The Bharatiya Nabhikiya Vidyut Nigam Limited (BHAVINI) is in which State?

(A) Gujarat

(B) Andhra Pradesh

(C) Bihar

(D) Tamil Nadu

20. The scientific objective of ASTROSAT mission is

(A) to study the surface of the earth

(B) to study the moon

(C) to study the distant celestial sources

(D) to study the mars

21. Biodegradables are the substances

(A) that are inert

(B) that persist in environment for a long time

(C) that may harm the various members of the ecosystem

(D) that are broken down by biological processes

22. 'SATYAM' program of Government of India is related to

(A) sports and culture

(B) yoga and meditation

(C) Gandhian principles

(D) clean India campaign

23. What is the full form of 'CSIR'?

(A) Cognitive Science Initiative for Research

(B) Community for Science and Industrial Research

(C) Council of Scientific and Industrial Research

(D) Center for Scientific and Industrial Research

24. Who is known as the 'Missile Woman of India'?

(A) Tessy Thomas

(B) Padmasree Warrior

(C) Ruchi Sanghvi

(D) Kalpana Chawla

25. Which of the following is a 'surface-to-air missile'?

(A) Agni

(B) Prithvi

(C) Akash

(D) Astra

26. The objective of the national program 'The Kishore Vaigyanik Protsahan Yojana' (KVPY) is

(A) to identify students with talent and aptitude for engineering studies

(B) to identify young scientists for national level awards

(C) to attract talent to the study of science at an early age

(D) to identify students with talent and aptitude for research and encourage them to take up research career in science

27. Chemotherapy is the treatment of diseases by using

(A) X-rays

(B) infrareds

(C) chemicals

(D) radioactive elements

28. Richter scale is a/an _____ scale to measure earth tremors.

(A) exponential

(B) logarithmic

(C) linear

(D) geometric

29. Human genome project endeavours to

(A) decode DNA

(B) invent AIDS treatment

(C) study of evolution of human

(D) study of fingerprints

30. Cryogenic engine uses _____ as fuel.

(A) gases in liquid form

(B) uranium

(C) water in gaseous form

(D) oxygen or hydrogen in gaseous form

31. The instrument used to observe a distant object is called

(A) stethoscope

(B) microscope

(C) telescope

(D) endoscope

32. Engineer's Day in India is celebrated on the birth anniversary of

(A) Sir C. V. Raman

(B) Shri C. Kumar N. Patel

(C) Professor Meghnad Saha

(D) Shri M. Visvesvaraya

33. Which of the following is the world's fastest supercomputer?

(A) Sunway TaihuLight

(B) Titan

(C) Summit

(D) Tianhe–2

34. A central computer that holds collections of data and programs for many PCs, workstations and other computers is a

(A) server

(B) microprocessor

(C) supercomputer

(D) cloud

35. 'Project Loon' sometimes in news is developed by

(A) Apple

(B) ISRO

(C) Microsoft

(D) Google

36. The Internet Intelligence Map is recently launched by

(A) Oracle

(B) Google

(C) Microsoft

(D) Apple

37. Which city tops in the 4G connectivity among 20 of India's largest cities?

(A) Bengaluru

(B) Patna

(C) Kolkata

(D) Lucknow

38. What is the name of the new malware which takes over electronic devices and make them 'bots'?

(A) Saposhi

(B) Ransomware

(C) Mirai

(D) Trojan horse

39. With which organization, NITI Aayog signed a pact on latest technologies including robotics and artificial intelligence?

(A) NASA

(B) IRobot

(C) Google

(D) ABB Group

40. BGR–34 often seen in news is a/an

(A) anti-diabetic ayurvedic drug

(B) indigenously developed rice variety

(C) India's anti-tank missile

(D) type of fertilizer

41. The principle of dialysis is based on

(A) gravity flow

(B) centrifuge

(C) diffusion

(D) Pascal's law

42. 'El Nino' event is associated with

(A) solar activity

(B) computer technology

(C) sports

(D) weather

43. The device in communication satellites which receives signals from an earth station and transmits them to different directions is

(A) transducer

(B) transponder

(C) transistor

(D) solar panel

44. Which country assisted India to establish Koodan-Kulam Nuclear Power Station in Tamil Nadu?

(A) Russia (B) France

(C) Germany (D) Canada

45. Which of the following national laboratories is dealing with research and development work on radiation technology?

(A) PRL (B) NCL

(C) ISRO (D) BARC

46. With reference to 'cloud seeding', which statement is true?

(A) It is a process of enhancing agricultural yield

(B) It is a technique for carbon sequestration

(C) It is a process of weather modification

(D) It is a process of storing large amount of digital data

47. Plants which grow in water of high salinity are called

(A) xerophytes

(B) mesophytes

(C) hygrophytes

(D) halophytes

48. Where does the Kuiper belt located in our solar system?

(A) Between Mars and Jupiter

(B) Beyond Neptune

(C) Between Jupiter and Saturn

(D) Between Uranus and Neptune

49. With reference to an 'ultra thin artificial leaf', which of the following statements is true?

(A) It is used to generate hydrogen fuel from water

(B) It is used in generation of electricity

(C) It is used to cure cancer

(D) It converts light energy into chemical energy

50. 'Sohum' is a/an

(A) hearing screening device

(B) cobot

(C) robot

(D) anti-tank guided missile

51. In Euler's equation

(A) no force is neglected

(B) only force of compressibility is neglected

(C) both force of compressibility and force of turbulence are neglected

(D) forces of compressibility, turbulence and velocity are neglected

52. In Navier-Stroke equation

(A) no force is neglected

(B) only force of compressibility is neglected

(C) both force of compressibility and force of turbulence are neglected

(D) forces of compressibility, turbulence and velocity are neglected

53. The term z in total energy expression

$$\frac{p}{\rho g}+\frac{v^2}{2g}+z$$

is

(A) potential energy

(B) pressure energy

(C) potential energy per unit weight

(D) None of the above

54. Bernoulli equation finds its application in

(A) Pitot tube

(B) venturi meter

(C) orifice meter

(D) All of the above

55. Critical path lies along the activities having total float

(A) positive (B) negative

(C) zero (D) same

56. Various activities of a project are shown on bar charts by

(A) vertical lines

(B) horizontal lines

(C) dots

(D) crosses

57. Critical path network helps an engineer

(A) to concentrate his attention on critical activities

(B) to divert the resources from non-critical advanced activities to critical activities

(C) to be cautious for avoiding any delay in the critical activities to avoid delay of the whole project

(D) All of the above

58. If TL is the latest allowable event occurrence time, total activity slack(s) is equal to

(A) Lst-est

(B) Lft-eft

(C) Tl-eft

(D) All of the above

59. For the supply of materials for concrete, form work reinforcing and placing of concrete, removal of form work and curing of concrete, the number of bar(s) required on bar chart is

(A) 1 (B) 2

(C) 3 (D) 4

60. Carbonisation of coal consists of

(A) drying and crushing the coal to a fine powder

(B) moulding the finely ground coal under pressure with or without a binding material

(C) heating the wood with a limited supply of air to temperature not less than 280 °C

(D) None of the above

61. If the value of $n = 0$ in the equation $pv^n = c$, then the process is called

(A) constant volume process

(B) adiabatic process

(C) constant pressure process

(D) isothermal process

62. The behaviour of a perfect gas, undergoing any change in the variables which control physical properties, is governed by

(A) Boyle's law

(B) Charles' law

(C) Gay-Lussac law

(D) All of the above

63. Which of the following gases has the highest calorific value?

(A) Coal gas

(B) Producer gas

(C) Mond gas

(D) Blast furnace gas

64. The work ratio of a gas turbine plant is given by

(A) $\dfrac{\text{Net work output}}{\text{Work done by the turbine}}$

(B) $\dfrac{\text{Net work output}}{\text{Heat supplied}}$

(C) $\dfrac{\text{Actual temperature drop}}{\text{Isentropic temperature drop}}$

(D) $\dfrac{\text{Isentropic increase in temperature}}{\text{Actual increase in temperature}}$

65. Which statement about a series *R-C* circuit is true?

(A) The capacitor's voltage drop is in phase with the resistor's voltage drop

(B) The current leads the source voltage

(C) The current lags the source voltage

(D) The resistor voltage lags the current

66. The simple rotating loop between pole faces connected to a battery and resistor through a switch. The specifications of this machine are radius = 0·5 m, length 1 m, resistance = 0·3 ohm and magnitude strength = 0·25 t is supplied with 120 V. Suddenly the switch is closed at $t = 0$, what is observed in the circuit?

(A) Current will flow but zero induced e.m.f.

(B) Current will not flow and zero induced e.m.f.

(C) Current will not flow but e.m.f. if induced

(D) Current will flow and e.m.f. will also be induced

67. What is the collector current for a CE configuration with a beta of 100 and a base current of 30 μA?

(A) 30 μA (B) ·3 μA

(C) 3 μA (D) 3 mA

68. How much current will flow in a 100 Hz series *R-L-C* circuit if $v_s = 20$ V, $r_t = 66$ ohms and $x_t = 47$ ohms?

(A) 1·05 A (B) 303 mA

(C) 247 mA (D) 107 mA

69. Determine V_{Th} when R_L is 180 Ω and X_L is 90 Ω as shown in the figure given below.

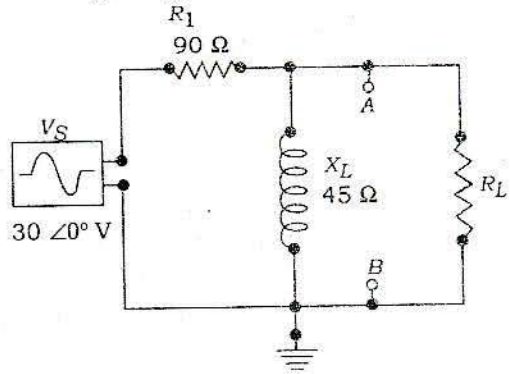

(A) 135∠63·4° V

(B) 13·5∠63·4° V

(C) 12·2∠0° V

(D) 122∠0° V

70. When a silicon diode is forward biased, what is V_{be} for a CE configuration?

(A) Voltage-divider bias

(B) 0·4 V

(C) 0·7 V

(D) Emitter voltage

71. The input resistance of the base of an emitter-follower is usually

(A) very low

(B) very high

(C) shorted to ground

(D) open

72. When the frequency of the voltage applied to a series *R-C* circuit is decreased, the impedance

(A) increases

(B) decreases

(C) remains the same

(D) doubles

73. In the complex plane, the number $4 + j3$ is located in the

(A) first quadrant

(B) second quadrant

(C) third quadrant

(D) fourth quadrant

74. If V_1 is the primary applied voltage and e_1 is the primary induced e.m.f., for an ideal transformer

(A) $V_1 > e_1$ (B) $V_1 = e_1$

(C) $V_1 < e_1$ (D) $V_1 = e_{1/2}$

75. What would happen if a power transformer designed for operation on 50 Hz (frequency) were connected to a 500 Hz (frequency) source of the same voltage?

(A) Current will be too much high

(B) Transformer may start to smoke and burn

(C) Eddy current and hysteresis loss will be excessive

(D) No effect

76. In an autotransformer, the primary and secondary are _____ coupled.

(A) only magnetically

(B) only electrically

(C) magnetically as well as electrically

(D) None of the above

77. Impedance ratio of a transformer is equal to

(A) square of turns ratio

(B) turns ratio

(C) 1

(D) infinite

78. A type of bond in the brick masonry in which each course consists of alternate headers and stretchers is

(A) English bond

(B) Raking bond

(C) Dutch bond

(D) Flemish bond

79. Quoins in brick masonry are

(A) bricks cut a corners in a triangular fashion

(B) half-brick with length same but width halved

(C) squint junction of walls

(D) corner junction of walls

80. If r is rise and g is going of stairs, the empirical formula used to fix rise and going is $2r + g$ and it should be between

(A) 500 mm–600 mm

(B) 550 mm–650 mm

(C) 600 mm–650 mm

(D) 650 mm–700 mm

81. Maximum size of coarse aggregate used as base coarse in ground floor is

(A) 12 mm (B) 20 mm

(C) 40 mm (D) 50 mm

82. Flying shores are used to strengthen

(A) single wall

(B) two adjacent walls

(C) tall walls

(D) Any of the above

83. When large openings are to be made in existing wall, the type of temporary work used is

(A) raking shore

(B) flying shore

(C) dead shore

(D) underpinning

84. Water requirement per day per bed in a hospital is

(A) 45 litres

(B) 135 litres

(C) 270 litres

(D) 340 litres

85. Which one of the following is ***not*** a type of trap used in plumbing?

(A) p-type (B) q-type

(C) s-type (D) z-type

86. The cement to dry sand proportion recommended for plastering concrete surface is

(A) 1 : 3 (B) 1 : 6

(C) 1 : 8 (D) 1 : 10

87. Gauged cement mortar consists of

(A) cement and sand

(B) cement, surkhi and sand

(C) cement, lime and sand

(D) cement, cinder and sand

88. Impact value of stone for road work specified is

(A) wearing coat 30%

(B) bituminous macadam 35%

(C) water-bound macadam 40%

(D) All of the above

89. Which one of the following ***does not*** belong to endogenous trees?
(A) Teak (B) Coconut
(C) Bamboo (D) Cane

90. Alumina in brick earth gives the brick's
(A) strength
(B) colour
(C) plasticity
(D) resistance to shrinkage

91. Pallet board is used
(A) to make frog in the brick
(B) to mount the mould
(C) for table moulding of brick
(D) None of the above

92. When fat lime is slaked, its volume
(A) decreases to 50%
(B) remains same
(C) increases by 2 to 2·5 times
(D) increases by 4 times

93. The process of adding water to quicklime in order to convert it into hydrated lime is known as
(A) quenching
(B) hydration
(C) calcination
(D) slaking

94. Rotary kiln used in manufacturing cement rotates at a speed of
(A) 1 r.p.m.–3 r.p.m.
(B) 10 r.p.m.–12 r.p.m.
(C) 18 r.p.m.–22 r.p.m.
(D) more than 25 r.p.m.

95. Fineness modulus is
(A) the ratio of fine aggregates to coarse aggregate
(B) the ratio of fine aggregates to total aggregate
(C) an index which gives the mean size of the aggregates used in a mix
(D) None of the above

96. Match List–I with List–II and select the correct answer using the codes given below the Lists :

List–I (Parts of exogenous tree)	*List–II (Character)*
a. Cambium layer	1. Youngest layer
b. Pith	2. Innermost part
c. Heartwood	3. Thin layer of fresh sap
d. Sapwood	4. Portion surrounding pith

Codes :

	a	b	c	d
(A)	1	2	3	4
(B)	3	2	4	1
(C)	4	1	3	2
(D)	1	3	2	4

97. By calcining and smelting iron ores, a crude and impure form of iron obtained is known as

(A) cast iron

(B) wrought iron

(C) steel

(D) pig iron

98. The compressive strength of high duty bricks should be more than

(A) 40 N/mm^2

(B) 20 N/mm^2

(C) 5 N/mm^2

(D) 3·5 N/mm^2

99. If f is the focal length, i is the stadia hair interval and d is the distance between the optical centre of the object lens, the multiplying constant is

(A) f/i (B) $f+d$

(C) $(f/i)+d$ (D) $f+id$

100. In a tacheometry, if intercept taken on a vertically held staff is inclined at q to horizontal, the horizontal distance is

(A) $ks+c$

(B) $ks\cos q+c\cos q$

(C) $ks\cos 2q+c\cos q$

(D) $ks\sin 2q+c\sin q$

101. In external focussing telescope with an anallatic lens, for tacheometric survey, the additive constant is

(A) zero (B) 0·1 m

(C) 0·3 m (D) 0·5 m

102. In a sag curve, a minimum of stoppage distance is determined with assumptions of headlight ____ and beam tilted at an upward angle of ____.

(A) 1·0 m and 2°

(B) 0·75 m and 2°

(C) 1·0 m and 1°

(D) ·75 m and 1°

103. Match List–I with List–II and select the correct answer using the codes given below the Lists :

List–I (Types of benchmarks)	*List–II (Fixed by)*
a. GTS benchmark	1. A survey team at the end of day work
b. Permanent benchmark	2. The Survey of India
c. Arbitrary benchmark	3. State PWD
d. Temporary benchmark	4. A survey team in the beginning of a project

Codes :

	a	b	c	d
(A)	3	2	4	1
(B)	3	2	1	4
(C)	2	3	1	4
(D)	2	3	4	1

104. If coordinates of stations a, b, c and d are (x_1, y_1), (x_2, y_2), (x_3, y_3) and (x_4, y_4) respectively, the area of $abcd$ is

(A) $a = 0 \cdot 5[y_1(x_4 - x_2) + y_2(x_1 - x_3) + y_3(x_2 - x_4) + y_4(x_3 - x_1)]$

(B) $a = 0 \cdot 5[y_1(x_1 - x_2) + y_2(x_2 - x_3) + y_3(x_3 - x_4) + y_4(x_4 - x_1)]$

(C) $a = 0 \cdot 5[y_1(x_2 - x_3) + y_2(x_3 - x_4) + y_3(x_4 - x_1) + y_4(x_3 - x_2)]$

(D) None of the above

105. Spire test is to check which of the following permanent adjustments of theodolite?

(A) Plate level axis is perpendicular to vertical axis

(B) Horizontal axis is perpendicular to vertical axis

(C) The line of sight coincides with the optical axis of the telescope

(D) The axis of altitude level is parallel to the line of sight

106. A theodolite is considered to be in proper condition, if

(A) the axis of the plate is perpendicular to the vertical axis

(B) the trunnion axis is perpendicular to the vertical axis

(C) the axis of the altitude level is parallel to the line of collimation

(D) All of the above

107. Pick up the correct feature of accidental error in surveying.

(A) Positive and negative errors will occur with equal frequency

(B) Small errors occur more frequently

(C) Large errors do not occur

(D) All of the above

108. The reading taken from an instrument station on a bench-mark of 100·00 RL is 1·2 and the reading taken on next station is 1·70. Then RL of next station is

(A) 98·8 m (B) 98·30 m

(C) 99·50 m (D) 100·50 m

109. An imaginary line joining the point of intersection of the crosshairs of the diaphragm and the optical centre of the object glass is known as

(A) axis of telescope

(B) axis of level tube

(C) line of collimation

(D) horizontal axis

110. The minor instrument used not only to take horizontal sights but also inclined sights are known as

(A) clinometer

(B) sextant

(C) pantograph

(D) planimeter

111. Which one is ***not*** the effect of the presence of iron oxide in water?

(A) Causes red colour

(B) Increases corrosiveness

(C) Increases hardness

(D) Causes toxic effect

112. Colour of water is expressed in number of a

(A) pO value

(B) silica scale

(C) platinum-cobalt scale

(D) None of the above

113. The maximum permissible total solid content in water for domestic purposes should not exceed

(A) 400 p.p.m.

(B) 500 p.p.m.

(C) 600 p.p.m.

(D) 800 p.p.m.

114. Match List–I with List–II and select the correct answer using the codes given below the Lists :

List–I (Type of impurity)	*List–II (Process used for removal)*
a. Bulky floating and suspended matter	1. Floatation tanks
b. Oil and grease	2. Racks and screens
c. Suspended solids	3. Biological growth (slimes)
d. Colloidal and dissolved organic matter	4. Chemical flocculation

Codes :

(A)	a	b	c	d
	1	2	3	4
(B)	a	b	c	d
	1	2	4	3
(C)	a	b	c	d
	2	3	1	4
(D)	a	b	c	d
	2	1	4	3

115. To serve as mains laid on bridges, ideally suited pipes are

(A) cast iron pipes

(B) wrought iron pipes

(C) steel pipes

(D) cement concrete pipes

116. Which one of the following is ***not*** a formula to find headloss due to friction in flow through pipes?

(A) Darcy-Weisbach formula

(B) Hazen-Williams formula

(C) Lea formula

(D) Manning's formula

117. Drain valves/scour valves in a water distribution system are provided at

(A) high-end points

(B) low-end points

(C) regular intervals in a pipeline

(D) All of the above

118. The dose of copper sulphate in water treatment varies from

(A) 0·3 p.p.m. to 0·6 p.p.m.

(B) 1 p.p.m. to 1·5 p.p.m.

(C) 2 p.p.m. to 2·5 p.p.m.

(D) 3 p.p.m. to 4 p.p.m.

119. A fluoride concentration of _____ in water is beneficial for the prevention of dental caries in children.

(A) 0·1 p.p.m. to 0·6 p.p.m.

(B) 0·7 p.p.m. to 1·2 p.p.m.

(C) 1·4 p.p.m. to 2·0 p.p.m.

(D) 2·5 p.p.m. to 3·0 p.p.m.

120. The most commonly used sewer under culvert is

(A) circular sewer

(B) semi-elliptic sewer

(C) egg-shaped sewer

(D) horseshoe-type sewer

121. The disinfection efficiency of chlorine in water treatment

(A) is not dependent on pH value

(B) is increased by increased pH value

(C) remains constant at all pH value

(D) is reduced by increased pH value

122. List–I contains some properties of water/wastewater and List–II contains some tests on water/wastewater. Match the property with corresponding test and select the correct answer using the codes given below the Lists :

List–I	*List–II*
a. Suspended solids concentration	1. BOD
b. Metabolism of biodegradable organics	2. MPN
c. Bacterial concentration	3. Jar test
d. Coagulant dose	4. Turbidity

Codes :

(A)	a	b	c	d
	2	1	4	3
(B)	a	b	c	d
	4	1	2	3
(C)	a	b	c	d
	2	4	1	3
(D)	a	b	c	d
	4	2	1	3

123. The potable water is prepared from turbid surface water by adopting which of the following treatment sequences?

(A) Turbid surface water, coagulation, flocculation, sedimentation, filtration, disinfection, storage and supply

(B) Turbid surface water, disinfection, flocculation, sedimentation, filtration, coagulation, storage and supply

(C) Turbid surface water, filtration, sedimentation, disinfection, flocculation, coagulation, storage and supply

(D) Turbid surface water, sedimentation, flocculation, coagulation, disinfection, filtration, storage and supply

124. Match List–I with List–II and select the correct answer using the codes given below the Lists :

List–I	*List–II*
a. Thickening of sludge by chemical oxidation	1. Decrease in volume
b. Stabilization of sludge by heat or chemical treatment	2. Separation of water
c. Conditioning of sludge	3. Digestion of sludge
d. Reduction of sludge by floatation or gravity	4. Separation of water

Codes :

	a	b	c	d
(A)	4	3	1	2
(B)	3	2	4	1
(C)	4	3	2	1
(D)	2	1	3	4

125. The BOD removal efficiency in percentage, during primary treatment, under normal conditions is about

(A) 65% (B) 85%

(C) 30% (D) zero

126. Bulking sludge refers to having

(A) $f/m < 0{\cdot}3/d$

(B) $0{\cdot}3/d < f/m < 0{\cdot}6/d$

(C) f/m = zero

(D) $f/m > 0{\cdot}6/d$

127. SO_2 and CO adversely affect

(A) oxygen carrying capacity of blood and functioning of lungs respectively

(B) functioning of the respiratory system and brain respectively

(C) functioning of the respiratory system and oxygen carrying capacity of blood respectively

(D) functioning of air passages and chest respectively

128. A projectile is fired with initial velocity u at an angle 55° to horizontal. Then second projectile was fired with the same velocity but at an angle 35° to horizontal. Then the ratio of horizontal projection of first one to second one is

(A) more than 1

(B) equal to 1

(C) less than 1

(D) May be anything depending upon the value of u

129. If a roller is to be pulled over a curb, the least force q required is

(A) vertical

(B) horizontal

(C) 45° to the reaction

(D) 90° to the reaction

130. The angles between the two forces to make their resultant a minimum and a maximum are respectively

(A) 180° and 0°

(B) 90° and 0°

(C) 180° and 90°

(D) 0° and 180°

131. Which one of the following is fundamental law of forces?

(A) Triangle law

(B) Polygonal law

(C) Parallelogram law

(D) Lami's theorem

132. Free-body diagram means

(A) the diagram drawn with free hand

(B) the diagram of a body with applied forces

(C) the diagram of a body with applied forces, self-weight and reactions

(D) the diagram of a freely suspended body

133. 0·2 percent proof stress means

(A) stress corresponding to 0·2 percent strain

(B) 0·2 percent of ultimate stress

(C) stress at which if unloading is made, there will be 0·2 percent permanent set

(D) None of the above

134. In case of steel, the strain at yield point is

(A) 0·0125% (B) 0·125%

(C) 1·25% (D) 12·50%

135. In case of brittle materials, the ratio of ultimate compressive stress to ultimate tensile stress is

(A) equal to 1

(B) more than 1

(C) less than 1

(D) May be anything. No definite relation exists

136. A bar of brass is enclosed in a steel tube and is rigidly fastened at both the ends. If the coefficient of thermal expansion of brass is more than that of steel, when temperature rises, the nature of stresses developed are

(A) tensile in steel tube and compressive in brass bar

(B) compressive in steel tube and tensile in brass bar

(C) tensile in both steel tube and brass bar

(D) compressive in both steel tube and brass bar

137. The relationship among modulus of elasticity e, bulk modulus k and Poisson's ratio m is

(A) $e = 3k(1+2m)$

(B) $e = 3k(1-2m)$

(C) $e = 2k(1+m)$

(D) $e = 2k(1-2m)$

138. A portion of beam between two sections is said to be in pure bending, when there is

(A) constant bending moment and constant shear force

(B) constant bending moment and zero shear force

(C) zero bending moment and constant shear force

(D) zero bending moment and zero shear force

139. Maximum shear stress in a beam of circular section is ____ times the average stress.

(A) 1·25 (B) 1·33

(C) 1·5 (D) 1·67

140. A cantilever carries a uniformly distributed load from fixed end to the mid-span in the first case and a udl of same intensity from mid-span to the free end in the second case. The ratio of maximum deflections in the two cases is

(A) $\frac{1}{3}$ (B) $\frac{3}{21}$

(C) $\frac{5}{24}$ (D) $\frac{7}{41}$

141. Kern of rectangular columns is having ____ shape.

(A) rectangular

(B) square

(C) diamond

(D) triangular

142. In the analysis of thin cylinders, assumptions made are

(i) radial stress is neglected

(ii) the hoop and longitudinal stress distribution across section is uniform

Which statement/statements is/are correct?

(A) Both (i) and (ii) are true

(B) (i) is true and (ii) is false

(C) (i) is false and (ii) is true

(D) Both (i) and (ii) are false

143. In an electrical strain gauge, the quantity measured to determine strain is

(A) current

(B) voltage

(C) resistance

(D) None of the above

144. In the above case, the direction of maximum principal plane is

(A) at $\frac{1}{2}\tan^{-1}\frac{3}{4}$ to the x-direction

(B) at $\frac{1}{2}\tan^{-1}\frac{3}{4}$ to the y-direction

(C) at 30° to the x-direction

(D) at 30° to the y-direction

145. A bar AC shown in the figure given below is fixed at both ends and is subjected to a torque t at B where $AB = \frac{1}{3}$. Then torque at end A is

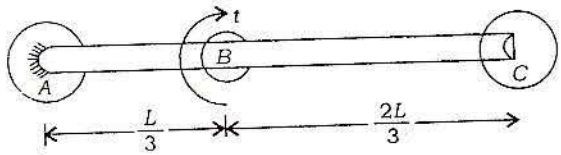

(A) $\frac{t}{3}$ (B) $\frac{t}{2}$

(C) $\frac{2t}{3}$ (D) t

146. A is a shaft of diameter d and B is a shaft of diameter $2d$. The ratio of polar modulus of section B to section A is

(A) 2 (B) 6

(C) 8 (D) 16

147. In finding Reynolds number, the characteristic length of circular pipe is taken as

(A) d (B) $2d$

(C) $5d$, (D) $10d$

148. In case of turbulent flow, the loss of pressure head is proportional to v^n where v is mean velocity and n is from

(A) 1·0 to 1·5

(B) 1·75 to 2·0

(C) 2·25 to 2·5

(D) 2·75 to 3·0

149. If the Froude number in open channel flow is less than 1·0, the flow is known as

(A) subcritical

(B) critical

(C) supercritical

(D) None of the above

150. The most efficient theoretical section to get maximum discharge for a given cross-section is

(A) triangular

(B) rectangular

(C) trapezoidal

(D) circular.