gradeup

GATE 2020

Electronics & Communication Engineering

Solution

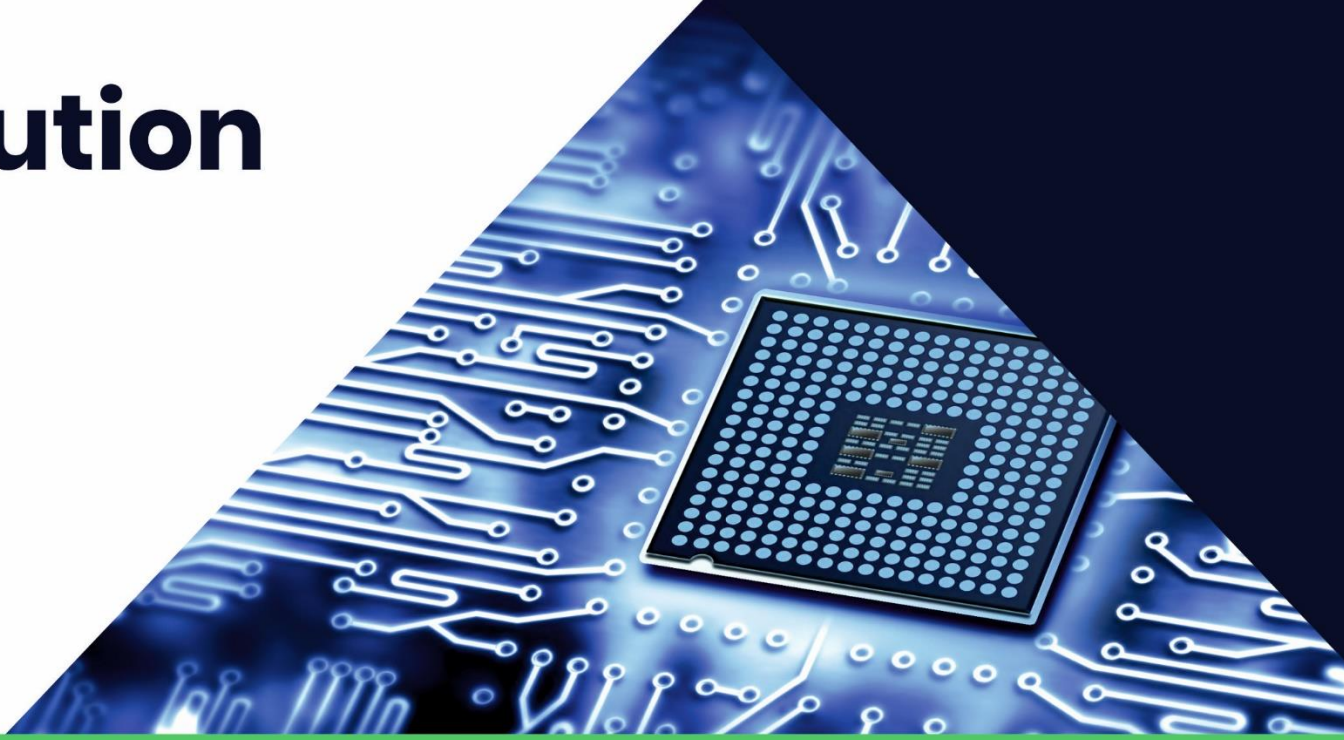

GENERAL APTITUDE

1.

ANS. C

SOL. The untimely loss of life is a cause of serious global concern as thousands of people get killed **in** accidents every year while many other die **of** diseases like cardiovascular

2.

ANS. D

SOL. He was not only accused of theft **but also** of conspiracy.

3.

Ans. D

SOL. Explicit: Implicit:: Express**: Repress**

4.

ANS. C

SOL. The French-speaking couple were upset at the English announcements being longer than the French ones.

5.

Ans. A

Sol. Let $x_2 > x_1$

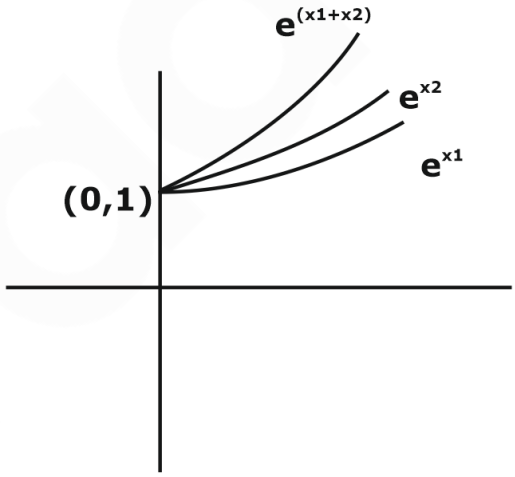

Check

Let $x_2 = 3$

$X_1 = 2$

$e^{x1}+^{x2} = e^5$

$e^{x1} = e^2$

$e^{x2} = e^3$.

Then $e^5 > e^2 + e^3$. Which is true

6.

ANS. B

SOL. East Asian crisis → subprime lending crisis → banking crisis → global financial crisis.

7.

ANS. D

Sol. 60 units of min hand = 5 units of hour hand.

∴ 15 units of min hand = $\frac{5 \times 15}{50}$ units of hour hand

= 1.25 units of hour hand

60 units = 360°

1.25 units = 6 × 1.25°

= 7.5°.

8.

ANS. B

Sol.

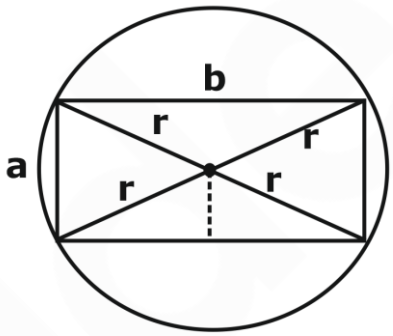

$r^2 = \frac{a^2}{4} + \frac{b^2}{4}$

$\because \frac{b^2}{4} = r^2 - \frac{a^2}{4}$

$b = \pm\sqrt{4r^2 - a^2}$

$b^2 = 4r^2 - a^2$

Area A = ab

$= \pm a\sqrt{4r^2 - a^2}$

$A^2 = a^2 (4r^2 - a^2)$

$\frac{dA^2}{da} 4r^2 \times 2a - 4a^3 = 0$

$4a (2r^2 - a^2) = 0$

$\Rightarrow a^2 = 2r^2$

$\therefore b^2 = 4r^2 - 2r^2$

$= 2r^2$.

$\therefore$ area of rectangle = $(r\sqrt{2})^2$

$=2r^2$.

area of circle = πr^2.

$\therefore$ Required area = $(\pi - 2)r^2$

9.

Ans. B

Sol. $Ax^2 - bx + c = 0$

$$2\beta = \frac{b}{a} \Rightarrow \beta = \frac{b}{2a} ------(1)$$

$$\beta^2 = \frac{c}{a} ------(ii)$$

$$(i) \times (ii) \text{given } \beta^3 = \frac{bc}{2a^2}$$

10.

Sol. No of students enrolled in P = 3 + 5 + 5 + 6 + 4 = 23

No of students enrolled in Q = 4 + 7 + 8 + 7 + 5 = 31

$$\therefore \text{ratio} = \frac{23/5}{(31-23)15} = \frac{23}{8} = 2.875$$

TECHNICAL

11.

ANS. (6.25 -6.25)

Sol.

Given, characteristic impedance $Z_0 = 50\ \Omega$

Load impedance $Z_L = 400$

And input impedance $Z_{in} = (Z_0)^2 / Z_L$

$= 50^2/400$

$= 6.25\ \Omega$

12.

ANS. (48-48)

Sol. Old Parameters –

$V_1 = 40i_1 + 60i_2$ ...(i)

$V_2 = 60i_1 + 120i_2$ ...(ii)

Z_{th} by testing method

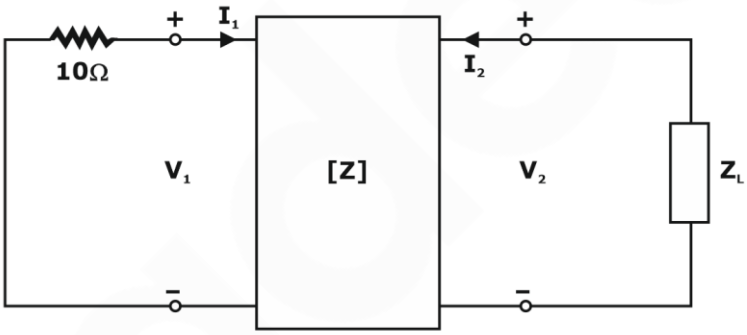

KVL in mesh (i)

$10i_1 + V_1 = 0$

$V_1 = -10i_1$

And $i_2 = 1A$

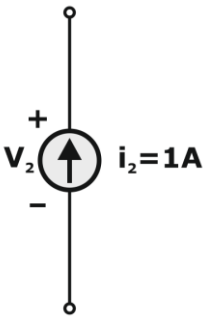

From eq. (i)

$V_1 = 40i_1 + 60 \times 1$ ...(iv)

$-10i_1 = 40i_1 + 60$

$i_1 = -6/5$

$$V_2 = 60 \times \left(-\frac{6}{5}\right) + 120 \times 1$$

$= -72 + 120$

$= 48$ V

∴ to deliver max. power to load z_L

$Z_L = R_{th}$

$$\therefore z_L = \frac{V_2}{i_2} = \frac{48}{1}$$

$= 48\ \Omega$

13.

Ans. B

Sol. U_{max} occurs at the edges of the depletion region in the device..

14.

ANS.-B

Sol.

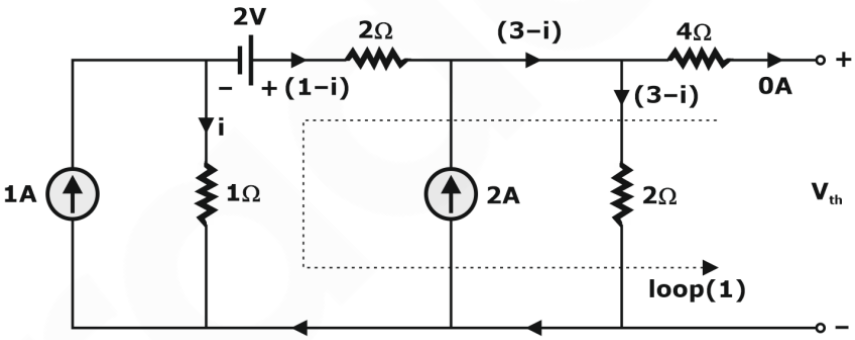

KVL in Loop (i)

$(i \times 1) - 2(3 - i) - 2(1 - i) + 2 = 0$

$i - 6 + 2i - 2 + 2i + 2 = 0$

$5i = 6$

$i = 1.2$ A

$\therefore V_{th} = 2 \times (3 - i)$

$= 2 \times (3 - 1.2)$

$= 3.6$ volts

15.

ANS. A

Sol. $E_{f_i} = \frac{E_C + E_V}{2} - \frac{kT}{2} \ln \frac{N_C}{N_V}$

$= \frac{E_g}{2} - \frac{kT}{2} \ln \frac{N_C}{2N_C} (\because N_v = 2N_c)$

$E_{F_i} = \frac{E_g}{2} - \frac{kT}{2} \ln \left(\frac{1}{2}\right)$

$E_{F_i} = \frac{E_g}{2} + 9.01\,\text{meV}$

16.

Ans. (6 - 6)

Sol. Given $Y = \int_{-\infty}^{\infty} w(t)s(t)dt$, where $\phi(t) = \begin{cases} 1 & 5 \le t \le 7 \\ 0 & \text{otherwise} \end{cases}$

$S_w(f) = 3W/Hz$

$E(Y) = \int_{-\infty}^{\infty} E\big(w(t)\big)\phi(t)dt = 0$

$E[Y^2] = S_w(f)$ energy $\varphi(t)$

$= 6$

$Var[Y] = 6 - 0 = 6$

17.

ANS. (0.25 -0.25)

Sol. There can be 4 out comes.

{HH}, {HT}, {TH}, {TH}.

∴ Let 1 is denoted by head

∴ Let 0 is denoted by Tail.

∴ M = {1 1 0 0 }

N = { 1 0 1 0 }

X = min (M, N) = 1 0 0 0.

$P(X) = \frac{1}{4}\frac{1}{4}\frac{1}{4}\,1/4$

Now, X = 1

When {H H} comes up

∴ P(X = 1) = P[{H H}]

$= \frac{1}{4}$

Now X = 0 when {H T}, {T H} or {T T} come up

When

∴ P (X = 0) = $\frac{1}{4}$, ∴ $E(x) = \frac{1}{4} \times 1 = 0.25$

18.

ANS.C

Sol.

$$F = \bar{P}\bar{Q}R + P\bar{Q}R + PQ$$
$$= \bar{P}\bar{Q}R + P\bar{Q}R + PQ\bar{R} + PQR$$
$$= \Sigma m(1,5,6,7)$$

ΣP \ QR	00	01	11	10
0		1		
1		1	1	1

19.

ANS-D

Sol.

error probability = α

correct probability = 1− α

'N' Bits So

Correct probability = (1 − α) (1 − α) … 'N' times = $(1-\alpha)^N$

Erroneous probability = 1 − correct probability = $[1 - (1 - \alpha)^N]$.

20.

ANS. (160 -160)

Sol. Closed loop characteristic equations

1 + G(s) H(s) = 0

$$1 + \frac{K(s+11)}{s(s+2)(s+8)} = 0$$

$s^3 + 10s^2 + 16s + Ks + 11K = 0$

$s^3 + 10s^2 + (16 + k)s + 11K = 0$

s^3	1	16+K
s^2	10	11K
s^1	$\frac{10(16+K)-11K}{10}$	0
s^0	11K	0

For marginal stable system

$$\frac{10(16+K)-11K}{10}=0$$

160 + 10K – 11K = 0

K = 160

21.

ANS. (644 -657)

Sol. The circuit shown is a voltage doubler. So $V_o = 2V_m$

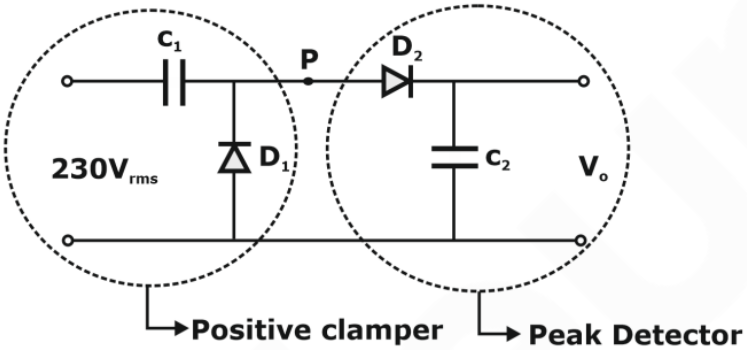

So the peak value at 'P' m 2Vm, Then the voltage across C_2 which is $2V_m$.

∴ Vo = 2Vm where $V_m = 230\sqrt{2}$ = 325.27V

V_o = 650.5V

22.

Ans. C

Sol. $Y(n) = \max\limits_{-\infty \le K \le n}\left[X(K)\right]$

$Y(n) = \max\left[\delta(K)\right] = 1 \quad -\infty \le K \le n$

Y(n) is 1 for all n.

23.

Ans. D

Sol. $Y(n) = \sum\limits_{K=0}^{3}(-1)^K X(n-K)$

Y(n) = X(n) – X(n – 1) +X (n – 2) – X(n – 3)

$Y(z) = 1 - z^{-1} + z^{-2} - z^{-3}$

$$y(z) = \frac{z^3 - z^2 + z^1 - 1}{z^3}$$

3 poles at z = 0 and number of zeros is 4

So the option (D) is correct

24.

Ans. C

Sol.

25.

Ans. D

Sol. $D^2 - 6D + 9 = 0$

$\Rightarrow (D-3)^2 = 0$

$D = 3, 3 \rightarrow$ equal roots

$\therefore y = (c_1 + c_2)e^{3x}$.

26.

ANS. 2.80 -2.85

Sol. Given

$V_s = 200 \cos 5t$

$$i(t) = 10\cos\left(5t - \frac{\pi}{4}\right)$$

By KVL

$V_s(t) = i(t)\, Z$

And $z = R + j\omega L = R + jX_L$

$$|Z| = \sqrt{R^2 + X_L^2} = \frac{V_m}{i_m} = \frac{200}{10}$$

$\therefore |Z| = 20$

Or simply $\sqrt{R^2 + X_L^2} = 20$ ...(i)

Given,

$$\theta = \tan^{-1}\left(\frac{\omega L}{R}\right) = \tan^{-1}\left(\frac{X_L}{R}\right)$$

$= 45°$

$$\therefore \frac{X_L}{R} = \tan(45°) = 1$$

$\therefore X_L = R$ ...(ii)

From equation (i) and (ii)

$$\sqrt{R^2 + X_L^2} = 20$$

$$\sqrt{X_L^2 + X_L^2} = 20$$

$$X_L\sqrt{2} = 20$$

$X_L = 14.14\ \Omega$

Or $\omega L = 14.14$

Given $\omega = 5$ rad/sec

$\therefore L = 2.828$ H

27.

ANS. (6 -6)

Sol. Applying virtual ground

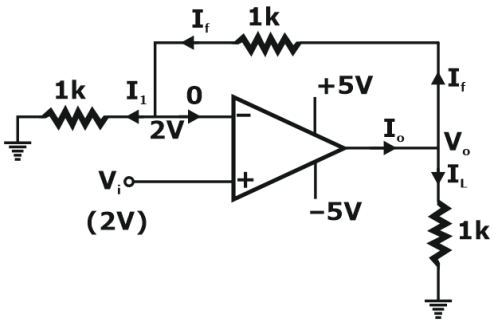

$I_1 = I_f$

$$\frac{2-0}{1K} = \frac{V_o - 2V}{1K}$$

$$2mA = \frac{V_o - 2V}{1K}$$

$V_o = 4V$

$$\therefore I_C = \frac{V_o - 0}{1K} = \frac{4-0}{1K} = 4mA$$

$\therefore I_o = I_L + I_f = 4$ mA + 2 mA ($\because I_f = I_1 = 2mA$)

= 6mA

28.

Sol. 3.050 -3.080

$(13A)_{16} = (?)_{10}$

$= 1 \times (16)^2 + 3 \times (16)^1 + 10 \times (16)^0$ {A = 10}

= 256 + 48 + 10

= 314

$(13A)_{16} = (314)_{10}$

Output voltage = Resolution × Decimal equivalent

$$= \frac{10}{2^{10}} \times 314 = \frac{10}{2^{10}} \times 314 = \frac{10}{1024} \times 314 = 3.065$$

29.

ANS. 14 - 14

Sol.

16K

$16 \times 2^{10} \times 8$ Bit

$2^4 \times 2^{10} \times 8$ bits

[8 data line for 8085 microprocessor]

$2^{14} \times 8$ Bits

n = 14

So, required address line = 14

30.

Ans. C

Sol. Given number of closed loop poles 2 in contour and number of closed loop 3 zero in contour. P = 2 and Z = 3. So effective number of encirclements to the origin is once in clockwise direction.

31.

ANS. (0.5-0.5)

Sol. There are only two symbols

X = –2

X = 2

Maximum entropy occurs for equal probability

$$H(X)_{max} = \log_2^2 = 1$$

$$P(X = 2) = \frac{1}{2}$$

$$P(X = -2) = \frac{1}{2}$$

32.

ANS. B

Sol. Z = jX

R = 0 (constant)

Hence, its mapping to the smith chart will represent a circle which has centre $\left(\frac{R}{R+1}, 0\right) \equiv (0, 0)$

33.

ANS. C

Sol. $$\frac{\partial f}{\partial x} = e^{(1-x\cos y)}(-\cos y) + ze^{\left(-\frac{1}{1+y2}\right)}$$

$$\left(\frac{\partial f}{\partial x}\right)_{(1,0,e)} = e^0(-1) + ee^{-1}$$

$$= -1 + 1 = 0$$

34.

ANS. A

Sol. $V_N = V_i \frac{1k}{2k} + V_o \frac{1k}{2k}$

$V_N = \frac{V_i + V_o}{2}$

$V_N > 0 \Rightarrow V_o = +V_{sat}$

Where $V_N = \frac{V_i + V_o}{2}$

If $V_o = +V_{sat} \Rightarrow V_N = \frac{1+5}{2} = 3V$ if $V_i = 1V$ peak

$V_N = \frac{-1+5}{2} = 2V$ if $V_i = -1V$ peak

If $V_o = -V_{sat} \Rightarrow V_N = \frac{1-5}{2} = -2$ if $V_i = +1V$ peak

$\Rightarrow V_N = \frac{-1-5}{2} = -3$ if $V_i = -1V$ peak

So the output is either $+V_{sat}$ or $-V_{sat}$ as V_N is not crossing '0'.

35.

Ans. C

Option c is correct

36.

Ans. (3 -3)

Sol. as ML detector is used, the decision boundary between two adjacent signal points will be their arithmetic mean. ∴

for $s_1 = -3$, the probability of error (p_1):

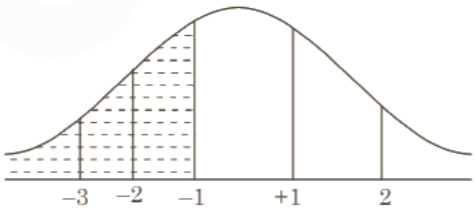

$P_1 = 1 -$ (shaded area)

for s_2 : The probability of error (P_2)

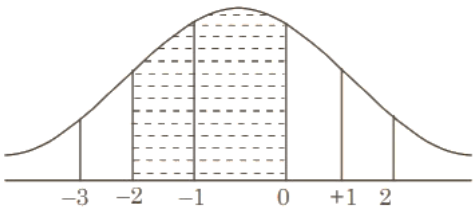

P_2 = 1 – (shaded area)

for s_3 : the probability of error P_3 .

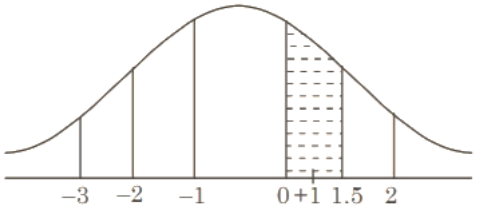

P_3 = 1 – (shaded area)

for s_4 : The probability of error (P_4)

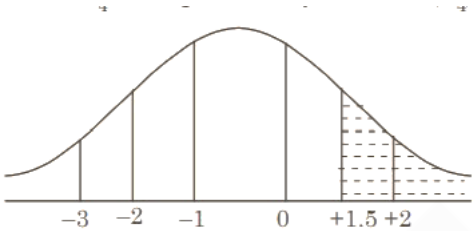

P_4 = 1 – (shaded area) By concluding above graph

P_3 i.e. probability of error when s3 is transmitted is larger among the four.

∴ I = 3

37.

ANS. D

Sol. $s^3 + 3s^2 + 2s + K(s + 3) = 0$

$$1+\frac{K(s+3)}{s+(s^2+3s+2)}=0$$

$$1+\frac{K(s+3)}{s(s+1)(s+2)}=0$$

Compare it with 1 + G(s)H(s) = 0

$$G(s)H(s)=\frac{K(s+3)}{s(s+1)(s+2)}$$

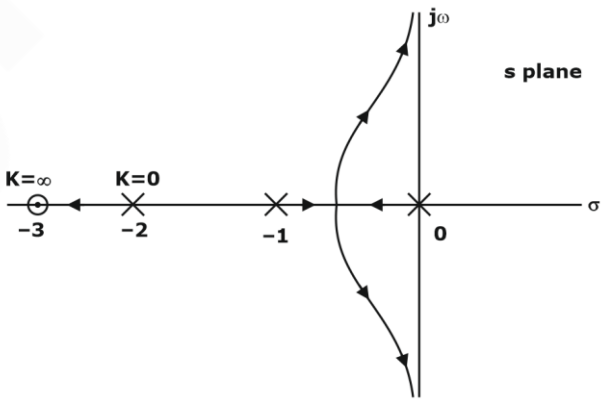

Breakaway point is in between (0, −1)

38.

ANS. C

Sol. x(t) = m(t) cos (2π fct)

m′(t) = 4 cos (1000 πt)

f_c = 1 MHz

Z(t) = m(t) cos (2πf_ct) cos [2π(f_c + 40)t]

$$= \frac{m(t)}{2}\cos\left[2\pi\ 2f_c + 40\right] + + \cos\left(\pi \times 40\right)t$$

$$= \cos\left(1080\ \pi t\right) + \cos\left(920\pi t\right)$$

$$= f_{m1} = 540\ \text{Hz}, \quad f_{m2} = 460\ \text{Hz}$$

So y(t) = cos 920πt

39.

Ans. B

Sol. From the figure, $E_C - E_V$ = 1eV = 0.5 Ev+ q φ_B + 0.2 eV

⇒ $q\varphi_B$ = 0.3eV

⇒ φ_B = 0.3 V, where $q\varphi_B = E_i - E_{FS}$

The magnitude of depletion charge density

$$\rho_S = \sqrt{2\,\epsilon_S\,N_A\psi_S} \qquad ...(1)$$

where, $\psi_s = 2\varphi_B$ = 2 × 0.3 V = 0.6 V ...(2)

Voltage across capacitor,

$$V_{TH} = V_{FB} + \frac{\sqrt{2\,\epsilon_S\,N_A\psi_S}}{C'_{ox}} + \psi_S \quad ...(3)$$

where, $V_{FB} = \varphi_{ms} = \varphi_m - \varphi_s$

= 3.87 – 4.8

$V_{FB} = \varphi_{mS}$ = –0.93V ...(4)

From (1), (2), (3) & (4),

$\rho_S = 1.7 \times 10^{-8}$ C/cm^2

40.

ANS. (-2 - -2)

Sol. Magnitude will become constant for all pass system

$$H(z) = \frac{Z - a}{Z + b}$$

$$b = \frac{1}{\alpha^*}$$

$$\alpha = \frac{1}{0.5}$$

a = 2

41.

Ans. D

Sol. X(t) = cos (200 φt)

$$t = \frac{n}{400} \quad n = 0, 1, \ldots 7$$

$$x(n) = \cos\left(200\pi \times \frac{n}{400}\right) = \cos\left(\frac{\pi}{2} \cdot n\right)$$

x[0] = 1
x[1] = 0
x[2] = −1
x[3] = 0
x[4] = 1
x[5] = 0
x[6] = −1
x[7] = 0
x[0] = {1, 0, −1, 0, 1, 0, −1, 0}

$$X(K) = \sum_{n=0}^{7} x[n]\, e^{-j\frac{\pi}{4}K.n}$$

$$X(3) = \sum_{n=0}^{7} x[n]\, e^{-j\frac{\pi}{4}7.n}$$

$$\left(\frac{1}{\sqrt{2}} - j\frac{1}{2}\right)^n \neq 0$$

$$e^{-j\frac{7\pi}{4}} = \cos\frac{7 \times 180}{4} - \frac{j \sin 7 \times 180}{4} = \frac{1}{\sqrt{2}} - j\frac{1}{\sqrt{2}}$$

42.

Ans. A

Sol. If output of sequence is 1, then it is transversed. So,

S_0	S_1	S_2	S_3	S_4
0	1	0	1	0

43.

Ans. A

Sol.

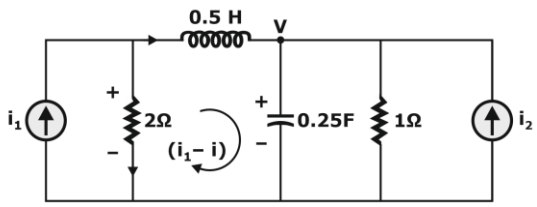

KVL in Loop

$$-0.5\frac{di}{dt} - V + (i_1 - i)2 = 0$$

$$\frac{di}{dt} = -2V + (-4i) + 4i_1 \quad ...(i)$$

KCL at node V

$$-i + C\frac{dV}{dt} + \frac{V}{1} - i_2 = 0$$

$$-i + 0.25\frac{dV}{dt} + V - i_2 = 0$$

$$0.25\frac{dV}{dt} = -V + i + i_2$$

$$\frac{dV}{dt} = -4V + 4i + 4i_2 \quad ...(ii)$$

write eqn. (i) and (ii) in matrix from

$$\frac{d}{dt}\begin{bmatrix} V \\ i \end{bmatrix} = \begin{bmatrix} -4 & 4 \\ -2 & -4 \end{bmatrix}\begin{bmatrix} V \\ i \end{bmatrix} + \begin{bmatrix} 0 & 4 \\ 4 & 0 \end{bmatrix}\begin{bmatrix} i_1 \\ i_2 \end{bmatrix}$$

option (A) is correct.

44.

Ans. C

Sol.

$$\left.\begin{aligned} X_1 + 2X_2 &= b_1 \\ 2X_1 + 4X_2 &= b_2 \end{aligned}\right\} 2b_1 = b_2$$

$3X_1 + 7X_2 = b_3$ ...(i)

$3X_1 + 9X_2 = b_4$ ...(ii)

In eqn. (i) we can write as

$3X_1 + 6X_2 + X_2 = b_3$

$3b_1 + X_2 = b_3$

$X_2 = b_3 - 3b_1$

and in eqn. (ii)

$3X_1 + 6X_2 + 3X_2 = b_4$

$3b_1 + 3[b_3 - 3b_1) = b_4$

$-6b_1 + 3b_3 - b_4 = 0$

$6b_1 - 3b_3 + b_4 = 0$

option (B) is correct

45.

Ans. C

Sol. During sampling, MOSFET must be as ON switch.

$\Rightarrow V_{GS} > V_{TH}$

$\Rightarrow (V_G - V_S) > V_{TH}$

$\Rightarrow V_G > V_S + V_{TH}$

$\Rightarrow V_G > 10 + 3V$ $\quad\quad \because V_S = V_{I,\,max} = 10V$

$\Rightarrow V_G > 13\ V$ ...(1)

During hold, MOSFET must be as OFF switch.

$\Rightarrow V_{GS} < V_{TH}$

$\Rightarrow (V_G - V_S) < V_{TH}$

$\Rightarrow V_G < (V_S + V_{TH})$

$\Rightarrow V_G < -7V$

$\therefore V_S = V_{I,min} = -10V$

46.

Ans. D

Sol. $\dfrac{dy}{y-1} = xdx$

$$\int \frac{dy}{y-1} = \int x\,dx$$

Such that $y \neq 1$.

47.

Ans- (58.50 – 58.80)

Sol.

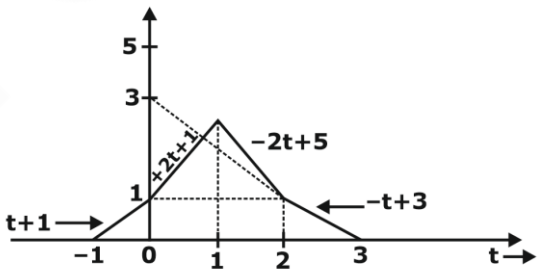

$$E = \frac{1}{2\pi}\int_{-\infty}^{\infty} |X(\omega)|^2 d\omega = \int_{-\infty}^{\infty} x^2(t)\,dt$$

$$\int_{-\infty}^{\infty} |X(\omega)|^2 d\omega = 2\pi\int_{-\infty}^{\infty} x^2(t)\,dt$$

$$\int_{-\infty}^{\infty} x^2(t)\,dt = \int_{-1}^{0}(t+1)^2\,dt + \int_{0}^{1}(2t+1)^2\,dt + \int_{1}^{2}(-2t+5)^2\,dt + \int_{2}^{3}(-t+3)^2\,dt$$

$= 9.33$

$$\int_{-\infty}^{\infty} |X(\omega)|^2 = 2\pi \times 9.33 = 2 \times 3.14 \times 9.33 = 58.5924$$

48.

Ans. D

Sol.

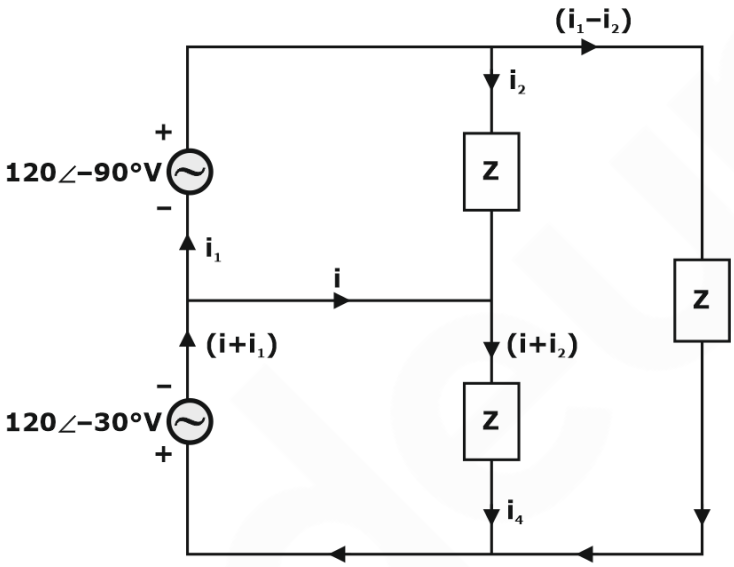

$$i_2 = \frac{120\angle -90^\circ}{Z} = \frac{120\angle -90^\circ}{(80-35j)}$$

$= 1.3742\ \angle -66.37^\circ$

And

$+ 120\angle -30^\circ + Z\, i_4 = 0$

$$i_4 = \frac{-(120\angle -30^\circ)}{Z}$$

$$= \frac{120\angle 150}{Z}$$

$$= \frac{120\angle 150}{(80-35j)}$$

$= 1.3742\ \angle 173.62^\circ$

$i_4 = i + i_2$

$\therefore i = i_4 - i_2$

$= (1.3742\ \angle 173.62) - 1.3742\ \angle -66.37^\circ$

$= 2.38\ \angle 143.625^\circ$

49.

Ans. (1 – 1)

Sol. Given,

$$\vec{H}(x,y,z,t) = \left(a_x + 2a_y + b + a_z\right)\cdot\cos\left(\omega t + 3x - y - z\right) A/m$$

For a uniform wave,

$$\vec{k}\cdot\vec{H}_o = 0, \vec{k}\cdot\vec{E}_o = 0,\ \vec{E}_o\cdot\vec{H}_o = 0$$

i.e., $\vec{E}, \vec{H}$ and $\vec{k}$ are mutually perpendicular to each other.

($\vec{k}$ is the vector along the direction of wave propagation)

Comparing the given expression of $\vec{H}$ with the standard expression.

$$\vec{k} = 3\ a_x - a_y\ - a_z$$

And, $\vec{H}_o = \left(a_x + 2a_y + ba_z\right)$

Then, $\vec{k}\cdot\vec{H}_o = 3 - 2 - b = 0$

$\Rightarrow b = 1$

50.

Ans. – (2- 2)

Sol. $S_{PM}(t) = \cos\left[1000\pi t + K_P m(t)\right]$

$$S_{Fm}(t) = \cos\left[1000\pi t + K_P\int_{\infty}^{t} m(\tau)\,d\tau\right]$$

Maximum instantaneous frequency in FM.

$$f_i = \frac{1}{2\pi}\left[\frac{d}{dt}\theta_i(t)\right]$$

$$f_i = \frac{1}{2\pi}\left[1000\pi t + K_f m(t)\right] \qquad \text{... (i)}$$

And maximum instantaneous frequency in PM

$$f_i = \frac{1}{2\pi}\left[1000\pi + \frac{d}{dt}k_p\ m(t)\right]$$

$$\frac{d}{dt}m(t)$$

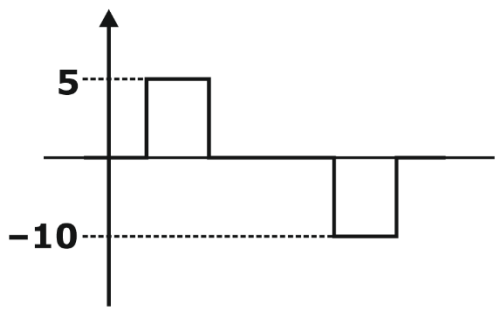

$$f_i = \frac{1}{2\pi}\left[1000\pi + K_p \times 5\right] \qquad \text{... (ii)}$$

Given maximum instantaneous frequency is same

$$\frac{1}{2\pi}\left[1000\pi + K_f m(t)\right] = \frac{1000\pi}{2\pi} + \frac{5K_P}{2\pi}$$

$$K_f \times 10 = 5\ K_P$$

$$\frac{K_p}{K_f} = 2$$

51.

Ans. (0.8 to 0.8)

Sol. $S_{12} = \dot{S}_{21} = \frac{2n}{n^2+1} = \frac{4}{4+1} = 0.8$

52.

Ans. B

Sol.

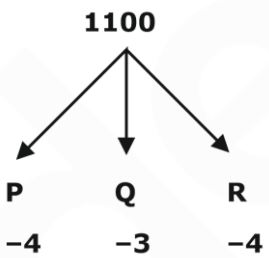

P + Q + R = −11

53.

Ans. B

Sol. Fill factor, $FF = \frac{P_o}{V_{OC}I_{SC}}$ ...(1)

Efficiency, $\eta = \frac{P_0}{P_{in}}$

where $P_{in} = 100\frac{mW}{cm^2} \times \text{Area}$

$= 100\frac{mW}{cm^2} \times 1\ cm^2$

= 100 mW.

$0.15 = \frac{P_0}{100\ mW}$

$\therefore P_0 = 15$ mW ...(2)

$$(1) \Rightarrow 0.8 = \frac{15mW}{0.7 \times I_{SC}}$$

I_{SC} = 0.027A

Optical generation rate,

$$G_{avg} = \frac{I_{SC}}{q \times Area \times thickness}$$

$$= \frac{0.027}{1.6 \times 10^{-19} \times 1 \times 200 \times 10^{-4}}$$

$= 0.837 \times 10^{19}$ /cm³/S

54.

Ans. D

Sol. B

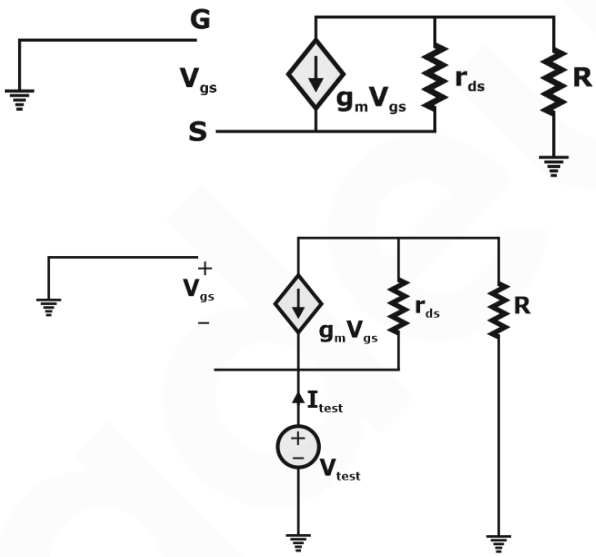

$V_{test} = -V_{gs}$

$= r_{ds}(I_{test} - g_m V_{test}) + I_{test}R$

$V_{test}(1+g_m r_{ds}) = I_{test}(r_{ds} + R)$

$$\frac{V_{test}}{I_{test}} = Req = \frac{r_{ds} + R}{1 + g_m r_{ds}}$$

55.

ANS. A

Sol. $A_V = \frac{-[R_C \,||\, R_L]}{r_e}$

$$r_e = \frac{26mV}{I_E}$$

DC analysis of the circuit gives,

$$I_E = \frac{10-0.7}{20k} = 0.465\,mA$$

$\therefore r_e = 55.9\ \Omega$

$$\therefore A_V = \frac{-(10k\,||\,10k)}{55.9} = -89.4$$

56.

ANS.B

57.

Ans. 2.25 (2.25 – 2.25)

Sol. From the figure

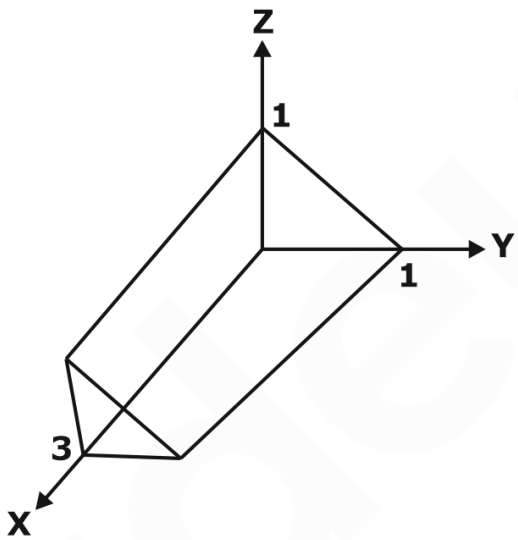

X = 0 to 3.

Y = 0 to 1

Z = 0 to 1 – Y

$$= \int_0^3 \int_0^1 \int_0^{Y-1} X\, dZ\, dY\, dX$$

$$= \int_0^3 \int_0^1 X\,(Z)\, dY\, dX$$

$$= \int_0^3 \int_0^1 X(1-Y) dY\, dX$$

$$= \int_0^3 X\left(Y - \frac{Y^2}{2}\right)\Bigg|_0^1 dX$$

$$= \int_0^3 x\,\frac{1}{2} dx$$

$$= \frac{x^2}{4}\Bigg|_0^3 = \frac{9}{4} = 2.25$$

58.

ANS. (4 – 4)

Sol.

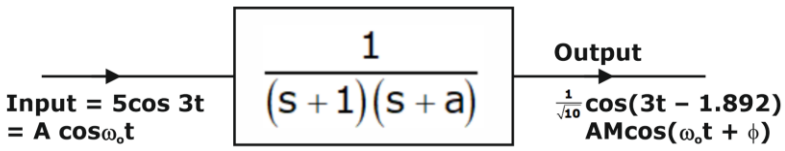

Where M = $|G(j\omega)|_{\omega=\omega o}$

$$G(j\omega) = \frac{1}{(1+j\omega)+(a+j\omega)}$$

$$|G(j\omega)| = \frac{1}{\sqrt{(\omega^2+1)(\omega^2+a^2)}}$$

$$M = |G(j\omega)|_{\omega=3} = \frac{1}{\sqrt{(10)(a^2+9)}}$$

$$AM = \frac{1}{\sqrt{10}} = \frac{5}{\sqrt{10}\sqrt{a^2+9}}$$

$a^2 + 9 = 25$

$a^2 = 16$

$a = 4$

$\because a > 0$

59.

Ans. A

insufficient data

60.

Ans. 76.92 (76 -78)

Sol. Total maximum propagation delay = $(T_{pd} + T_{setup})_{max}$ = 8ns + 5ns = 13ns

frequency of operation $= \left(\frac{1000}{13}\right)$ MHz = 76.92 MHz

61.

Ans. 800 (800 -800)

Sol.

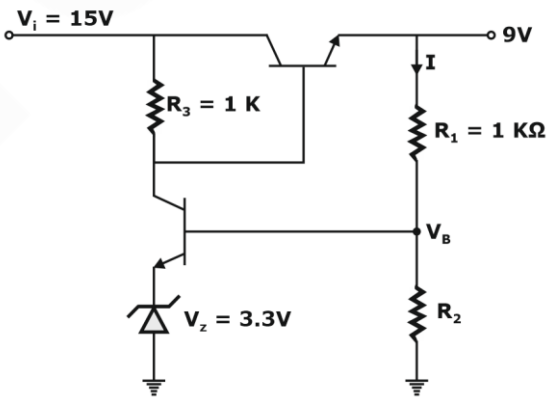

Voltage $V_B = V_z + V_{BE}$

= 3.3 + 0.7

$V_B = 4V$ ...(i)

$\therefore \quad I = \frac{9-4}{1K}$

$I = 5$ mA

Since base cement is negligible,

$V_B = 9 \times \frac{R_2}{R_1 + R_2}$

$4 = \frac{9R_2}{1K + R_2} \Rightarrow R_2 = 800\Omega$

62.

ANS. B

Sol. The circuit show is LPF

Applying virtual ground,

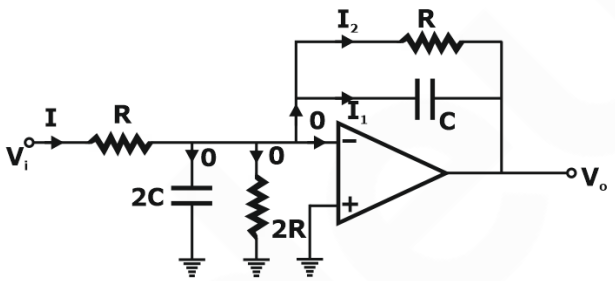

$I = I_1 + I_2$

$\frac{V_i - 0}{R} = \frac{0 - V_o}{R} + \frac{0 - V_o}{1/CS}$

$= -V_o\left[\frac{1}{R} + CS\right]$

$\frac{V_o}{V_i} = \left[\frac{1}{1 + RCS}\right]$

$\therefore \omega = \frac{1}{RC}$

$\Rightarrow f = \frac{1}{2\pi RC} = \frac{1}{2\pi\left(2 \times 10^3\right)\left(1 \times 10^{-6}\right)} = 79.58\text{Hz}$

63.

Ans. B*

Sol. insufficient data

Ans.

Sol. We know that

$$C_d \propto \frac{1}{\sqrt{V_0 + V_R}}$$

$$\frac{1}{(C_d)^2} = K(V_0 + V_R)$$

$$\frac{1}{\left(50 \times 10^{-12}\right)^2} = K\left[V_0 + V_R\right]$$

Reverse bias voltage given V_R = 0.2V

V_0 = applied voltage.

$$K = \frac{1}{2500\,(V_0 + V_R)} \times 10^{24}$$

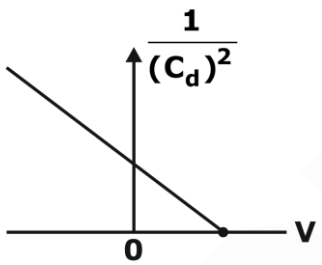

value of V_0 is not given so

slope will not to be calculated

64.

ANS. (0.3 – 0.3)

Sol. Given (0.3 to 0.3)

$$f_x(x) = \begin{cases} 1/12 & -2 \le x \le 10 \\ 0 & \text{otherwise} \end{cases}$$

As y = 2x – 6

$$\text{So, } f_y(y) = \begin{cases} 1/24 & -10 \le x \le 14 \\ 0 & \text{otherwise} \end{cases}$$

If x ≥ 5 then y ≥ 4

So, P(y ≤ 7/x ≥ 5) = P(Y ≤ 7/y ≥ 4)

$$= \frac{P(4 \le y \le 7)}{P(4 \le y \le 14)} = \frac{3}{10} = 0.3$$

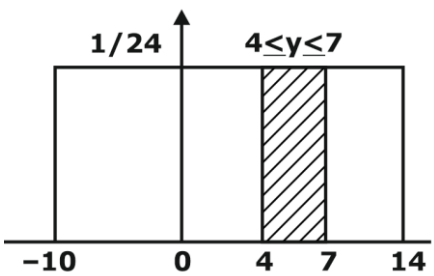

65.

ANS. (30 -30)

Sol. $\text{OLTF} = \frac{K(s+1)}{(s+3)} \times \frac{1}{s(s+1)}$

$$\text{OLTF} = \frac{K}{s(s+3)}$$

It is type '1' system

Steady state error for unit ramp input

$$e_{ss} = \frac{1}{K_V}$$

Where

$$K_p = \lim_{s \to \infty} s \times \frac{K}{s(s+3)} = \frac{K}{3}$$

$$e_{ss} = \frac{1}{K/3} = \frac{3}{K}$$

According to question, $e_{ss} = 0.1$

$$0.1 = \frac{3}{K} \Rightarrow K = 30$$

****

OUR TOP GRADIANS IN GATE 2020

Ghanendra Singh
AIR-6
ECE

Himanshu Kumar
AIR-9
EE

Nikhil Kumar
AIR-9
EE

Raja Majhi
AIR-30
ECE

Samanwaya Deep Chakraborty
AIR-41
ECE

Abhishek
AIR-45
ECE

Classroom

Vision 2021-Course for ESE & GATE (Batch-3)

Electronics & Communication Engineering

800+hrs
Live Class

7000+
Practise
Question

Test Series

Classroom

Vision 2021

A Course for **ESE & GATE** Electronics Aspirants

Batch-3

Why take this course?

- **650+ Hours** of Live Classes for ESE & GATE Technical Syllabus
- **150+ Hours** of Live Classes for ESE Prelims Paper 1 Syllabus
- **750+ Quizzes** & Conventional Assignments for Practice
- Subject & Full-Length **Mock Tests** for GATE & ESE




MN Ramesh | Rakesh talreja | Chandan Jha | Vijay Bansal

Prep Smart. Score Better. Go gradeup

www.gradeup.co