1. In the circuit shown, the diodes are ideal; the inductance is small, and $I_0 \neq 0$. Which one of the following statements is true?

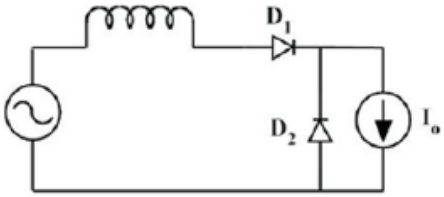

(A) D_1 conducts for greater than 180° and D_2 conducts for greater than 180°
(B) D_2 conducts for more than o 180 and D_1 conducts for 180°
(C) D_1 conducts for 180° and D_2 conducts for 180°.
(D) D_1 conducts for more than o 180 and D_2 conducts for 180°

Key: (A)

Sol: The inductance given in the problem is source inductance due to which there is overlap between the two diodes. Hence, each diode conducts for (180) +μ where μ is overlap angle.

2. For a 3-input logic circuit shown below, the output Z can be expressed as

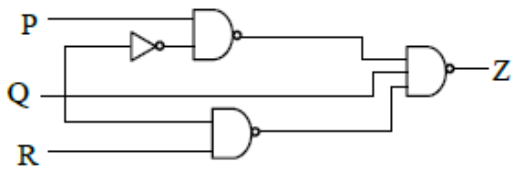

(A) $P+\overline{Q}+R$ (B) $\overline{PQ}+R$

(C) $\overline{Q}+R$ (D) $P+\overline{Q}+R$

Key: (C)

Exp:

$\Rightarrow \overline{\overline{P\overline{Q}}.Q.\overline{QR}}$

$\Rightarrow P\overline{Q}+\overline{Q}+QR$

$\Rightarrow \overline{Q}+QR[\because \quad =Q]$

$\Rightarrow \overline{Q}+R[\because \quad =\overline{A}+B]$

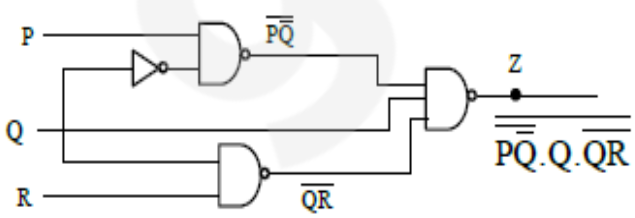

3. An urn contains 5 red balls and 5 black balls. In the first draw, one ball is picked at random and discarded without noticing its color. The probability to get a red ball in the second draw is

(A) $\frac{1}{2}$ (B) $\frac{4}{9}$ (C) $\frac{5}{9}$ (D) $\frac{6}{9}$

Key: (A)

Exp:

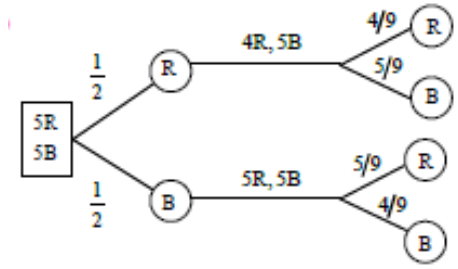

Here R is red ball, B is black ball

∴The probability to get a red ball in the second draw is

$$\frac{1}{2}\times\frac{4}{9}+\frac{1}{2}\times\frac{5}{9}=\frac{1}{2}$$

4. When a unit ramp input is applied to the unity feedback system having closed loop transfer function $\frac{C(s)}{R(s)}=\frac{Ks+b}{s^2+as+b}(a>0,b>0,K>0)$, the steady state error will be

(A) 0 (B) $\frac{a}{b}$ (C) $\frac{a+K}{b}$ (D) $\frac{a-K}{b}$

Key: (D)

Exp: Given $T(s)=\frac{C(s)}{R(s)}$

$C(t)=r(t)-\tau(t)$

Apply L.T to above equations

$E(s)=R(s)[1-T(s)]$

$$e_{ss}=C(\infty)=\underset{s\to 0}{lt}\,S.E(s)=\underset{s\to 0}{lt}\,.S.\frac{1}{S^2}\left[1-\frac{[Ks+b]}{s^2+as+b}\right]$$

$$=\underset{s\to 0}{lt}\frac{1}{S}\left[\frac{s^2+s[a-K]}{s^2+as+b}\right]=\underset{s\to 0}{lt}\frac{s+a-K}{s^2+as+b}$$

$$e_{ss}=\frac{a-K}{b}$$

5. A three-phase voltage source inverter with ideal devices operating in 180° conduction mode is feeding a balanced star-connected resistive load. The DC voltage input is V_{dc}. The peak of the fundamental component of the phase voltage is

(A) $\frac{V_{dc}}{\pi}$ (B) $\frac{2V_{dc}}{\pi}$ (C) $\frac{3V_{dc}}{\pi}$ (D) $\frac{4V_{dc}}{\pi}$

Key: (B)

Exp: Fourier series expansion of line to neutral voltage V_{ao} is given by

$$V_{ao}=\sum_{n=6k\pm 1}^{\infty}\left(\frac{2V_s}{n\pi}\right)\sin(n\omega t)$$

$$for\, n=1, V_{ao}=\frac{2V_s}{\pi}(\max value)$$

6. The figures show diagrammatic representations of vector fields $\overline{X}, \overline{Y}$ *and* $\overline{Z}$ respectively. Which one of the following choices is true?

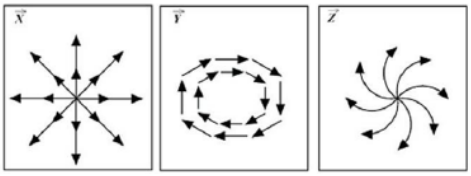

(A) $\nabla\vec{X} = 0, \nabla\times\vec{Y} \neq 0, \nabla\times\vec{Z} = 0$

(B) $\nabla\vec{X} \neq 0, \nabla\times\vec{Y} = 0, \nabla\times\vec{Z} \neq 0$

(C) $\nabla\vec{X} \neq 0, \nabla\times\vec{Y} \neq 0, \nabla\times\vec{Z} \neq 0$

(D) $\nabla\vec{X} = 0, \nabla\times\vec{Y} = 0, \nabla\times\vec{Z} = 0$

Key: (C)

Exp: for x Divergence not equal to zero $\Rightarrow \nabla\times\bar{x} \neq 0$

$$\left.\begin{array}{l} for\, y \begin{array}{l} -Divergence = 0 \\ curl \neq 0 \end{array} \\ for\, z \begin{array}{l} -Divergence \neq 0 \\ curl \neq 0 \end{array} \end{array}\right\} \begin{array}{l} \nabla\times\bar{t} \neq 0 \\ \nabla\times\bar{z} \neq 0 \end{array}$$

7. Assume that in a traffic junction, the cycle of the traffic signal lights is 2 minutes of green (vehicle does not stop) and 3 minutes of red (vehicle stops). Consider that the arrival time of vehicles at the junction is uniformly distributed over 5 minute cycles. The expected waiting time (in minutes) for the vehicle at the junction is _____.

a) 0.9 b) 2.1 c) 3.2 d) 4.2

Key: a

let time of arrival be a random variable X

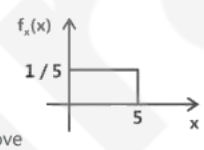

Uniform distribution is shown above

Assuming waiting time to be g(x), a function of arrival time.

If $0 \le x \le 2, g(x) = 0$ (green light)

$2 \le x \le 5, g(x) = 5 - x$ (red light)

The second case says that vehicle will wait till next green light occurs.

Average waiting time

$$E(g(x)) = \int_0^5 g(x)\, f_x(x)\, dx = \left[\int_0^2 0 \times \frac{1}{5} dx + \int_2^5 (5-x) \times \frac{1}{5} \times dx\right]$$

$$E(g(x)) = \frac{1}{5}\left(5x - \frac{x^2}{2}\right)_2^5 = \frac{1}{5}\left(5(5-2) - \frac{1}{2}(5^2 - 2^2)\right) = \frac{1}{5}\left(15 - \frac{21}{2}\right) = \frac{9}{10} = 0.9$$

8. Consider a solid sphere of radius 5 cm made of a perfect electric conductor. If one million electrons are added to this sphere, these electrons will be distributed.

(A) Uniformly over the entire volume of the sphere

(B) Uniformly over the outer surface of the sphere

(C) Concentrated around the centre of the sphere

(D) Along a straight line passing through the centre of the sphere

Key: (B)

Exp: For a perfect conductor, the charge is present only on the surface.

$$i.e, \left.\begin{array}{l} P_u = 0 \\ \overline{E} = 0 \end{array}\right\} inside\ the\ conductor$$

9. The transfer function C(s) of a compensator is given below.

$$C(s) = \frac{\left(1 + \frac{s}{0.1}\right)\left(1 + \frac{s}{100}\right)}{(1+s)\left(1 + \frac{s}{10}\right)}$$

The frequency range in which the phase (lead) introduced by the compensator reaches the maximum is

(A) $0.1 < \omega < 1$ (B) $1 < \omega < 10$ (C) $10 < \omega < 100$ (D) $\omega > 100$

Key: (A)

The pole zero plot for the compensator is,

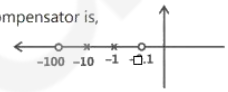

This is pole zero plot of lead lag compensator and hence produces phase lead for $0.1 < \omega < 1$ and phase lag for $10 < \omega < 100$

10. The figure show the per-phase representation of a phase-shifting transformer connected between buses 1 and 2, where α is a complex number with non-zero real and imaginary parts.

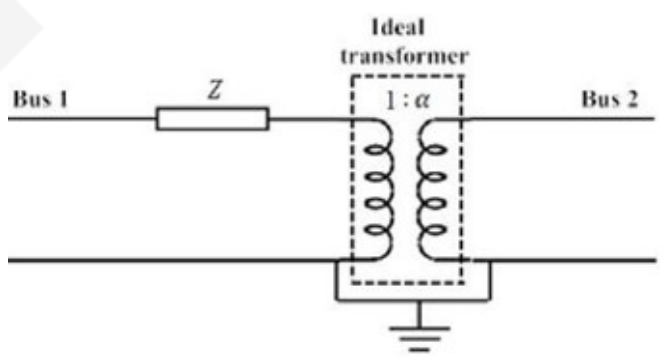

For the given circuit, Y_{bus} and Z_{bus} are bus admittance matrix and bus impedance matrix, respectively, each of size 2 2. ☐ Which one of the following statements is true?

(A) Both bus Y and Z_{bus} are symmetric

(B) Y_{bus} is symmetric and Z_{bus} is unsymmetric

(C) Y_{bus} is unsymmetric and Z_{bus} is symmetric

(D) Both Y_{bus} and Z_{bus} are unsymmetric

Key: (D)

Exp:

$$Y_{bus} = \begin{bmatrix} \frac{yt}{|a|^2} & \frac{-yt}{a^*} \\ \frac{-yt}{a} & yt \end{bmatrix}$$

$$Z_{bus} = Y_{bus}^{-1}$$

11. A phase-controlled, single-phase, full-bridge converter is supplying a highly inductive DC load. The converter is fed from a 230 V, 50 Hz, AC source. The fundamental frequency in Hz of the voltage ripple on the DC side is
(A) 25 (B) 50 (C) 100 (D) 300
Key: (C)
Exp:

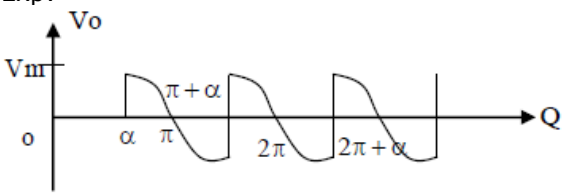

For one input pulse, Vo has 2 pulses
∴ Frequency of Vo ripple = 2f supply $2\times 50 = 100Hz$

12. Let x and y be integers satisfying the following equations
$$2x^2 + y^2 = 34$$
$$x + 2y = 11$$
The value of (x+y) is _____.
a) 9 b) 7 c) 12 d) 15
Key: b
Exp: Clearly x = 3 and y = 4 satisfies the given two equations
∴ x+y=7

13. Consider a function f (x, y, z) given by
$$f(x,y,z) = (x^2 + y^2 - 2z^2)(y^2 + z^2)$$
The partial derivative of this function with respect to x at the point, x = 2, y = 1 and z = 3 is _____
a) 45 b) 40 c) 25 d) 35
Key: b
Exp:
$$\frac{\partial f}{\partial x} = ((y^2 + z^2)(2x))atx = 2, y = 1, z = 3$$
$$= (1+9)(4) = 40$$

14. For the given 2-port network, the value of transfer impedance Z_{21} in ohms is_____

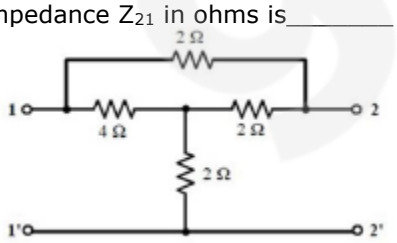

a) 3 b) 7 c) 9 d) 13
Key: a
Exp:

$$Z_{21} = \left.\frac{V_2}{I_1}\right|_{I_2=0}$$
$$V_2 = 2\times\frac{I_1}{2} + 2I_1 = 3I_1$$
$$\Rightarrow Z_{21} = \left.\frac{V_2}{I_1}\right| = 3$$

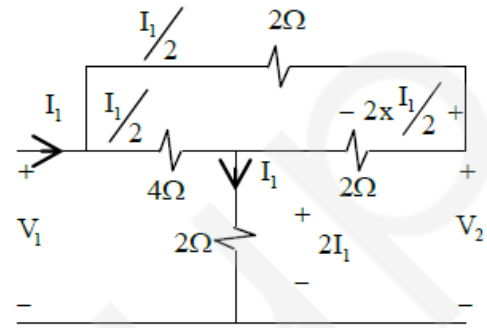

15. The initial charge in the 1 F capacitor present in the circuit shown is zero. The energy in joules transferred from the DC source until steady state condition is reached equals _____. (Give the answer up to one decimal place.)

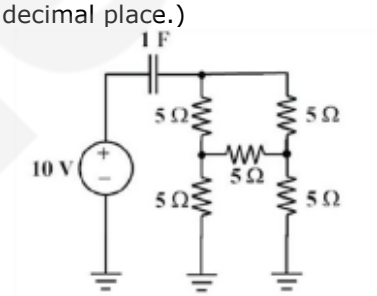

a) 100 b) 85 c) 74 d) 92
Key: a
Exp: Before initial charge on the capacitor = $0 \Rightarrow V_c(0) = 0V$
Final voltage $V_c(\alpha) = 10V$
To find time constant τ
$$R_{eq} = \frac{10\times 10}{10+10} = 5\Omega$$
$$\tau = R_{eq}; C = 5\lambda$$
$$V_c(t) = V_c(\alpha) + (V_c(0) - V_c(\alpha))e^{-t/\tau} = 10 - 10e^{-t/\tau}$$ We
$$\Rightarrow i_c(t) = C\frac{d\vartheta c}{dt} = 2e^{-t/5}$$
know that $i_r = i_c(\ell) = 2e^{-t/5}$
Instantaneous power
$$p = \vartheta \times i_r = 10\times 22e^{-t/5} = 20e^{-t/5}$$

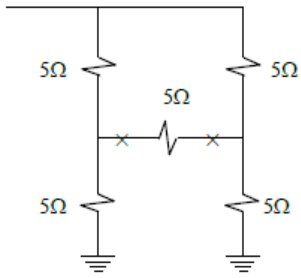

Energy transferred

$$= \int_0^\infty 20e^{-t/5}dt = 20\times 5\left[-e^{-t/5}\right]_0^\infty = 100\ J$$

16. The figure below shows the circuit diagram of a controlled rectifier supplied from a 230 V, 50 Hz, 1-phase voltage source and a 10:1 ideal transformer. Assume that all devices are ideal. The firing angles of the thyristors T_1 and T_2 are 90° and 270°, respectively.

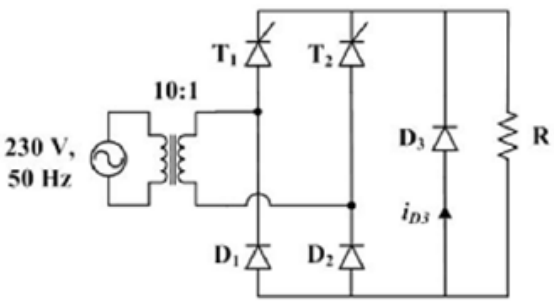

The RMS value of the current through diode D_3 in amperes is _____

a) 0 b) 10 c) 8 d) 12

Key: a

Exp: 0A since D_2 is OFF and it will not turn ON for R load.

17. In a load flow problem solved by Newton-Raphson method with polar coordinates, the size of the Jacobian is 100×100.If there are 20 PV buses in addition to PQ buses and a slack bus, the total number of buses in the system is _____.

a) 24 b) 61 c) 35 d) 50

Key: a

Exp: Given the size of bus is 100*100.

So [J]= 100

We have formula for [J] = [2n-m-2]

100= [2n-20-2]

Total no. of buses, n = 61

18. A 3-phase, 4-pole, 400 V, 50 Hz squirrel-cage induction motor is operating at a slip of 0.02. The speed of the rotor flux in mechanical rad/sec, sensed by a stationary observer, is closest to

(A) 1500 (B) 1470 (C) 157 (D) 154

Key: (C)

Exp:

$3-\phi$ S.C.I.M

$4-P$ s=0.02

400V $\phi_r \Rightarrow N_r$

Rotor flux speed is same as stator flux speed.

$$N_s = \frac{120\times 50}{4} = 1500$$

$$W_s = \frac{2\pi N}{60} = \frac{2\pi\times 1500}{60} = 157.08 rad/\sec$$

19. Two resistors with nominal resistance values R_1 and R_2 have additive uncertainties $\Delta R_1 and\ \Delta R_2$, respectively. When these resistances are connected in parallel, the standard deviation of the error in the equivalent resistance R is

(A) $\pm\sqrt{\left\{\frac{\partial R}{\partial R_1}\Delta R_1\right\}^2 + \left\{\frac{\partial R}{\partial R_2}\Delta R_2\right\}^2}$

(B) $\pm\sqrt{\left\{\frac{\partial R}{\partial R_2}\Delta R_1\right\}^2 + \left\{\frac{\partial R}{\partial R_1}\Delta R_2\right\}^2}$

(C) $\pm\sqrt{\left\{\frac{\partial R}{\partial R_1}\right\}^2 \Delta R_2 + \left\{\frac{\partial R}{\partial R_2}\right\}^2 \Delta R_1}$

(D) $\pm\sqrt{\left\{\frac{\partial R}{\partial R_1}\right\}^2 \Delta R_1 + \left\{\frac{\partial R}{\partial R_2}\right\}^2 \Delta R_2}$

Key: (A)

Exp:

$$R_{eq} = \frac{R_1 R_2}{R_1 + R_2}$$

$$\sqrt{\left\{\frac{\partial R}{\partial R_1}\right\}^2 \sigma_{R_1}^2 + \left\{\frac{\partial R}{\partial R_2}\right\}^2 \sigma_{R_2}^2}$$

OR

$$\sqrt{\left\{\frac{\partial R}{\partial R_1}\Delta R_1\right\}^2 + \left\{\frac{\partial R}{\partial R_2}\Delta R_2\right\}^2}$$

20. The nominal- π circuit of a transmission line is shown in the figure.

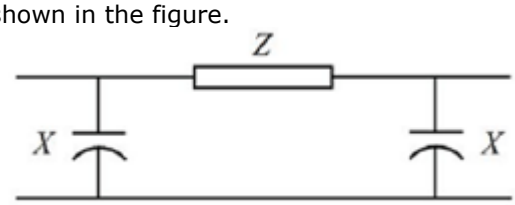

Impedance $Z = 10080^o\Omega$ and reactance $X = 3300\Omega$. The magnitude of the characteristic impedance of the transmission line, in Ω, is _____. (Give the answer up to one decimal place.)

a) 406 b) 478 c) 324 d) 225

Key: a
Exp:

$$\frac{y}{2}=\frac{1}{x}$$

$$y=\frac{2}{x}=\frac{2}{3300}=6.06\times10^{-4}$$

$$z_0=\sqrt{\frac{z}{y}}=\sqrt{\frac{100}{6.06\times10^{-4}}}=406.2\Omega$$

21. The pole-zero plots of three discrete-time systems P, Q and R on the z-plane are shown below.

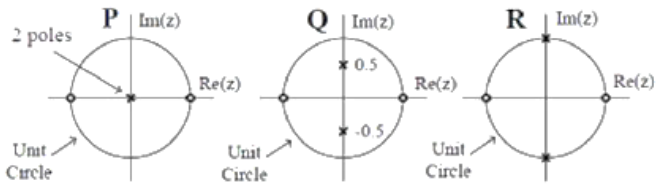

Which one of the following is TRUE about the frequency selectivity of these systems?
(A) All three are high-pass filters.
(B) All three are band-pass filters.
(C) All three are low-pass filters.
(D) P is a low-pass filter, Q is a band-pass filter and R is a high-pass filter.
Key: (B)
Exp: Ω =0 rad/samples represent low frequencies
$\Omega=\pi$ rad/ samples represent high frequencies
Since zeros are located at Ω =0 rad/samples and $\Omega=\pi$ rad/samples they cannot be high pass and low pass filters. Thus, they all represent band pass filters.

22. The mean square value of the given periodic waveform f(t) is_____

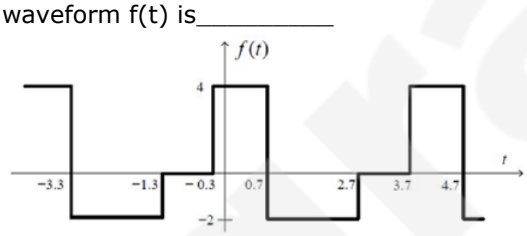

a) 6 b) 8 c) 10 d) 12
Key: a
Exp:

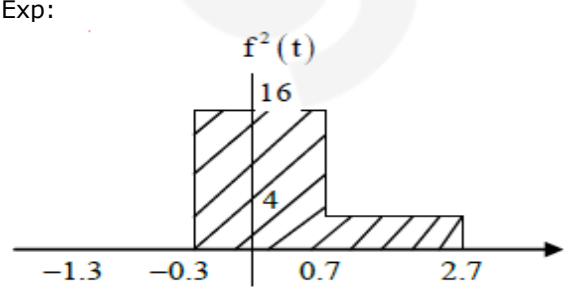

$$\text{Mean square value}=\frac{\text{Area under the squared function}}{\text{Period of the function}}$$

Area = $16\times(0.7+0.3)+4(2.7-0.7)$
=16+8=24volt-second
Period=2.7-(-1.3) = 4

Mean square value = $\frac{24}{4}=6$

23. A stationary closed Lissajous pattern on an oscilloscope has 3 horizontal tangencies and 2 vertical tangencies for a horizontal input with frequency 3 kHZ. The frequency of the vertical input is
(A) 1.5 kHz (B) 2 kHz
(C) 3 kHz (D) 4.5 kHz
Key: (D)
Exp:

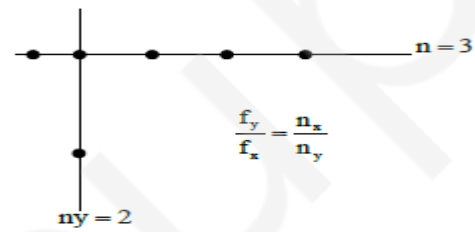

$$f_r=\frac{3}{2}\times3=\frac{9}{2}=4.5kHz$$

24. Let $y^2-2y+1=x$ *and* $\sqrt{x}+y=5$. The value of $x+\sqrt{y}$ equals _____. (Give the answer up to three decimal places)
a) 5.732 b) 7.236 c) 8.245 d) none of these
Key: a
Exp:

$$y^2-2y+1=x\Rightarrow\sqrt{x}=y-1$$

$$\therefore\sqrt{x}+y=5 gives 2y-1=5\Rightarrow y=3$$

$$\therefore x=4$$

$$\therefore x+\sqrt{y}=4+1.732=5.732$$

25. If a synchronous motor is running at a leading power factor, its excitation induced voltage (E_f) is
(A) Equal to terminal voltage (V_t)
(B) HIGHER than the terminal voltage (V_t)
(C) Less than terminal voltage (V_t)
(D) Dependent upon supply voltage (V_t)
Key: (B)
Exp: Higher than the terminal voltage.

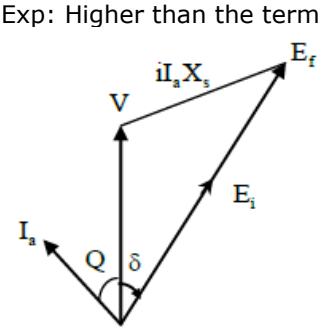

Q. No. 26 – 55 Carry Two Marks Each

26. Which of the following systems has maximum peak overshoot due to a unit step input?

(A) $\frac{100}{s^2+10s+100}$ (B) $\frac{100}{s^2+15s+100}$

(C) $\frac{100}{s^2+5s+100}$ (D) $\frac{100}{s^2+20s+100}$

Key: (C)

Exp: Peak over shoot = $e^{\frac{-\pi\xi}{\sqrt{1-\xi^2}}}$

In General

$$\begin{cases} If\ \xi=0,\ peak\ over\ shoot=100\%(Maximum) \\ If\ \xi=1,\ peak\ over\ shoot=0\%(Maximum) \end{cases}$$ Here

which of the following 'ξ' has value less, the system will have maximum over shoot.

$Option'A', \omega_n=10, 2\xi\omega_n=10 \Rightarrow \xi=0.5$

$Option'B', \omega_n=10, 2\xi\omega_n=15 \Rightarrow \xi=0.75$

$Option'C', \omega_n=10, 2\xi\omega_n=5 \Rightarrow \xi=0.25$

$Option'D', \omega_n=10, 2\xi\omega_n=20 \Rightarrow \xi=1$

So, option is correct

(OR)

By Inspection, see all options ω_n =constant, $2\xi\omega_n$ varies, so, $2\xi\omega_n$ less means, that system have maximum over shoot.

27. Consider an overhead transmission line with 3-phase, 50 Hz balanced system with conductors located at the vertices of an equilateral triangle of length $D_{ab}=D_{bc}=D_{ca}=1m$ as shown in figure below. The resistances of the conductors are neglected. The geometric mean radius (GMR) of each conductor is 0.01m. Neglecting the effect of ground, the magnitude of positive sequence reactance in Ω/km (rounded off to three decimal places) is _____

a) 0.289 b) 3.21 c) 4.24 d) 1.45

Key: a

Exp:

$D_{eq}=\sqrt[3]{D_{ab}D_{bc}D_{ca}}=1m=GMD$

$D_s=GMR=0.01m$

Inductance/phase/m=

$2\times10^{-7}\,In\frac{D_m}{D_s}=2\times10^{-7}\,In\left(\frac{1}{0.01}\right)$

$=9.21\times10^{-7}H$

Inductance/phase/km $=9.21\times10^{-4}H$

Reactance $=\omega L=2\pi\times50\times9.21\times10^{-4}=0.2892\Omega/km$

28. Two generating units rated 300 MW and 400 MW have governor speed regulation of 6% and 4% respectively from no load to full load. Both the generating units are operating in parallel to share a load of 600 MW. Assuming free governor action, the load shared by the larger unit is _____ MW.

a) 400 b) 420 c) 510 d) 480

Key: a

Exp: Assume No – load speed regulations are equal

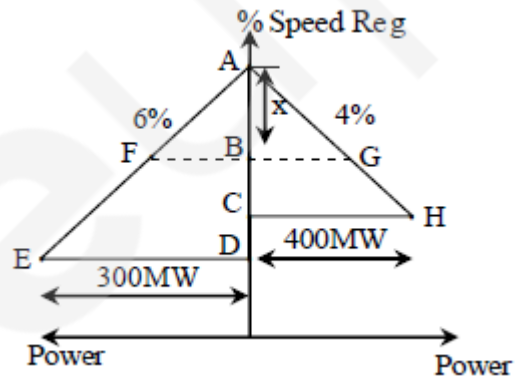

From similar triangles method

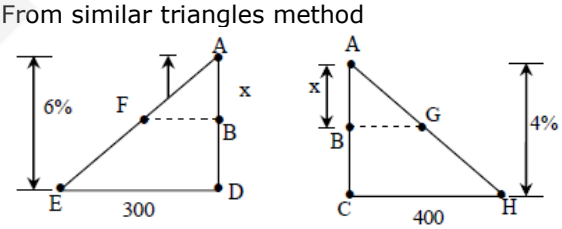

$\frac{FB}{ED}=\frac{FB}{ED}$ $\frac{BG}{CH}=\frac{AB}{AC}$

$P_1=300\times\frac{x}{6}$ $P_2=400\times\frac{x}{4}$

$P_1=50x$ $P_2=100x$

Given that $P_1+P_2=600MW$

150x=600

x=4

∴The load supplied by largest machine is P2=100×4=400MW

29. For the network given in figure below, the Thevenin's voltage V_{ab} is

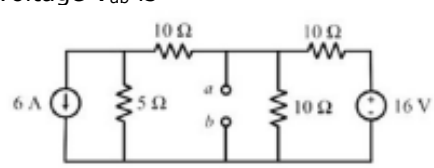

(A) -1.5 V (B) -0.5 V (C) 0.5 V (D) 1.5 V

Key: (A)
Exp: The equivalent CKT is
Apply nodal

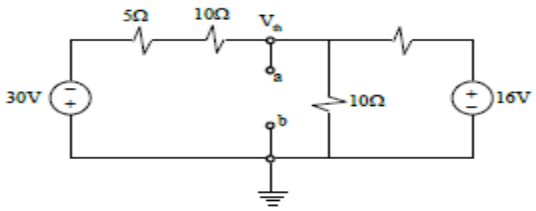

$$\frac{V_{th}+30}{15}+\frac{V_{th}}{10}+\frac{V_{th}-16}{10}=0$$

$$2V_{th}+60+3V_{th}+3V_{th}-48=0$$

$$\Rightarrow 8V_{th}=-12$$

$$\Rightarrow V_{th}=-1.5V$$

30. The output y(t) of the following system is to be sampled, so as to reconstruct it from its samples uniquely. The required minimum sampling rate is

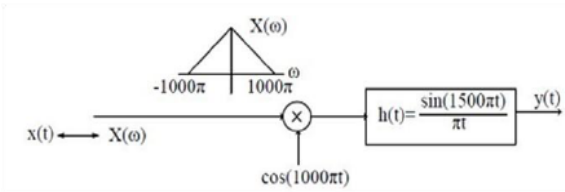

(A) 1000 samples/s (B) 1500 sample/s (C) 2000 samples/s (D) 3000samples/s
Key: (B)
Exp:

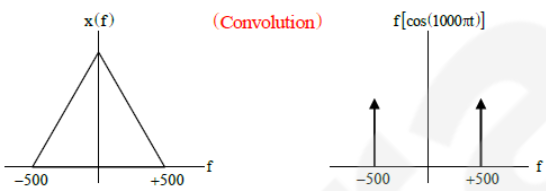

Consider

$$\cos(1000\pi t)\xleftrightarrow{F}\frac{1}{2}p[\delta(f-500)+\delta(f+500)]$$ Input signal to the LTI system is

$$x(f)\times\frac{1}{2}[\delta(f-500)+\delta(f+500)]$$

$$W(f)\times\frac{1}{2}\times(f-500)+\frac{1}{2}\times(f+500)$$

If the input signal is defined as w(t) then its Fourier transform can be drawn as follows:

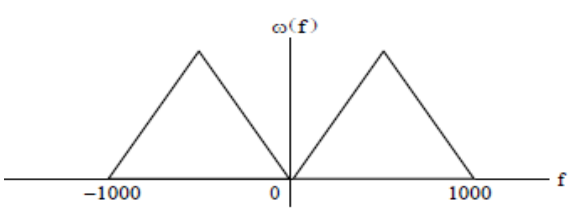

Given

$$h(f)=\frac{\sin(150\pi t)}{\pi t}$$

$$=1500\sin c(1500t)$$

$$\therefore H(f)=rect\left(\frac{f}{1500}\right)$$

$\therefore Y(f)=W(f)H(f)$ has a max frequency 750 HZ

∴ Minimum sampling rate = 1500 HZ

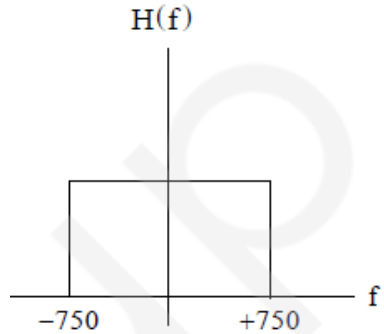

31. A 220 V, 10 kW, 900 rpm separately excited DC motor has an armature resistance $R_a=0.02\Omega$ When the motor operates at rated speed and with rated terminal voltage, the electromagnetic torque developed by the motor is 70 Nm. Neglecting the rotational losses of the machine, the current drawn by the motor from the 220 V supply is
(A) 34.2 A (B) 30 A (C) 22 A (D) 4.84 A
Key: (B)
Exp: Separately excited d.c. motor

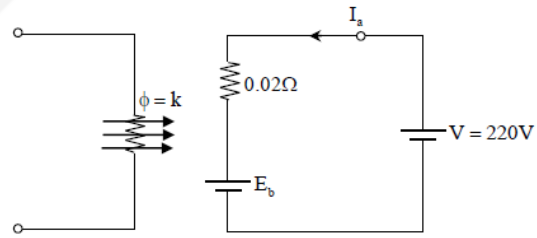

$$P=\frac{2\pi NT}{60}$$

$$E_bI_a=\frac{2\pi\times900\times70}{60}=6597$$

$$I_a=\frac{6597}{E_b}....(1)$$

$$V-I_aR_a=E_b$$

$$220-\frac{6597}{E_b}\times0.02=E_b$$

By solving above equation
We get

$$E_{b_1}=219.39, E_{b_2}=0.61$$

$$I_a=\frac{V-E_b}{R_a}=\frac{220-E_b}{00.2}\Rightarrow I_a=30.5Amps$$

32. A cascade system having the impulse responses $h_1(n)=\{\underset{\uparrow}{1},-1\} and h_2(n)=\{\underset{\uparrow}{1},1\}$ is shown in the figure below, where symbol ↑ denotes the time origin.

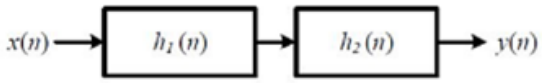

The input sequence x(n) for which the cascade system produces an output sequence $y(n)=\{\underset{\uparrow}{1},2,1,-1,-2,-1\}$ is

(A) $x(n)=\{\underset{\uparrow}{1},2,1,1\}$ (B) $x(n)=\{\underset{\uparrow}{1},1,2,2\}$

(C) $x(n)=\{\underset{\uparrow}{1},1,1,1\}$ (D) $x(n)=\{\underset{\uparrow}{1},2,2,1\}$

Key: (D)
Exp:

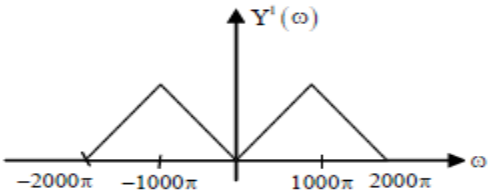

$$h(n)=h_1[n]*h2[n]=\left\{\underset{\uparrow}{1},0,-1\right\}$$

$$Y[n]=h(n)*x(n)$$

$$Given\ y[n]\{1,2,1,-1,-2,-1\}$$

By observation x[n] should be {1,2,2,1}

33. For the circuit shown in the figure below, it is given that $V_{CE}=\frac{V_{CC}}{2}$. The transistor has β=29 $and\ V_{BE}=0.7V$ when the B-E junction is forward biased.

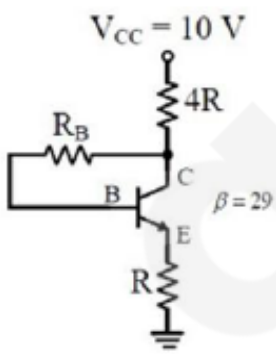

For this circuit, the value of $\frac{R_B}{R}$ is

(A) 43 (B) 92 (C) 121 (D) 129
Key: (D)
Exp: Given

$$V_{CE}=\frac{V_{CC}}{2}=\frac{10}{2}=5V$$

$$10=(1+\beta)I_B\times 4R+I_BR_B+0.7+(1+\beta)I_B.R$$

$$10=30I_B\times 4R+I_BR_B+0.7+30I_B\times R$$

$$9.3=I_B[120R+30R+R_B]$$

$$9.3=I_B[150R+R_B]....(1)$$

$$10=4R(1+\beta)I_B+V_{CE}+(1+\beta)I_B\times R$$

$$10=120RI_B+5+30I_B.R$$

$$I_B=\frac{5}{150R}=\frac{1}{30R}.....(2)$$

Substituting equation (2) in equation (1)

$$9.3=\frac{1}{30R}[150+R_B]$$

$$279=150+\frac{R_B}{R};\frac{R_B}{R}=279-150=129$$

34. A 3-phase, 2-pole, 50 Hz, synchronous generator has a rating of 250 MVA, 0.8 pf lagging. The kinetic energy of the machine at synchronous speed is 1000 MJ. The machine is running steadily at synchronous speed and delivering 60 MW power at a power angle of 10 electrical degrees. If the load is suddenly removed, assuming the acceleration is constant for 10 cycles, the value of the power angle after 5 cycles is _____ electrical degrees.

a) 12.7 b) 13.7
c) 18.2 d) 14.4

Key: a
Exp:

$$P_a=P_m-P_e$$

$$=60-0=60mw$$

$$m=\frac{GH}{180f}=\frac{1000}{180\times 50}=\frac{1}{9}$$

$$t=10cycles=\frac{10}{50}=0.25\sec$$

$$t=5cycles=\frac{5}{50}=0.1\sec$$

$$\delta=\frac{P_a}{m}.\frac{t^2}{2}\Rightarrow\delta=\frac{60}{\frac{1}{9}}\times\frac{(0.1)^2}{2}=2.7^o$$

$$New\ ration,\ \delta=10+2.7=12.7^o$$

35. For the circuit shown below, assume that the OPAMP is ideal.

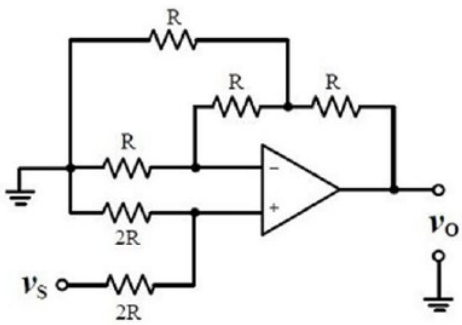

Which one of the following is TRUE?

(A) $v_o = v_s$

(B) $v_o = 1.5v_s$

(C) $v_o = 2.5v_s$

(D) $v_o = 5v_s$

Key: (C)

Exp: At node (1)

$$V_x = \frac{V_s \times 2R}{4R} = \frac{V_s}{2}$$

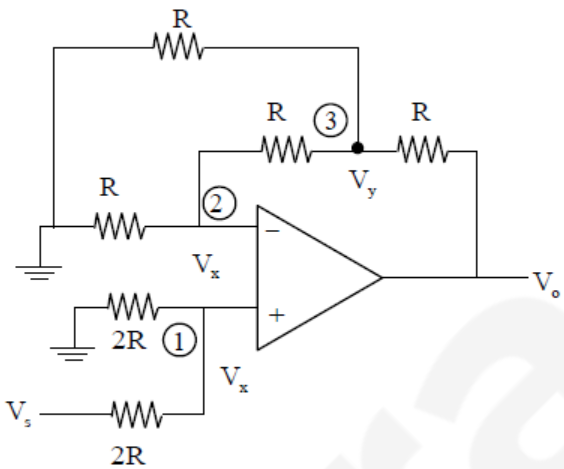

At node (2)

$$\frac{V_x}{2} + \frac{V_x - V_y}{R} = 0$$

$$2V_x = V_y;$$

$$V_y = \frac{2V_s}{2} = V_s$$

At node (3)

$$\frac{V_y}{R} + \frac{(V_y - V_x)}{R} + \frac{(V_y - V_o)}{R} = 0$$

$$V_s + V_s - \frac{V_s}{2} + V_s - V_o = 0$$

$$3V_s - \frac{V_s}{2} = V_o$$

$$V_o = \frac{5V_s}{2}; V_o = 2.5V_s$$

36. The root locus of the feedback control system having the characteristic equation $s^2 + 6Ks + 2s + 5 = 0$ where K >0 enters into the real axis at

(A) $s = -1$ (B) $s = -\sqrt{5}$

(C) $s = -5$ (D) $s = \sqrt{5}$

Key: (B)

Exp:

C.E= $s^2 + 6Ks + 2s + 5 = 0$

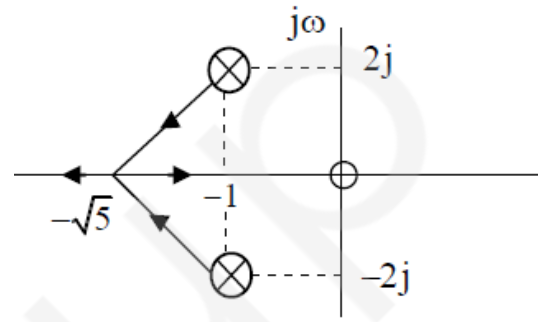

$$1 + \frac{6ks}{s^2 + 2s + 5} = 0$$

$$K = \frac{-(s^2 + 2s + 5)}{6s}$$

$$= -\frac{1}{6}\left[s + 2 + \frac{5}{s}\right]$$

$$\frac{dk}{ds} = 0 \Rightarrow \left[1 - \frac{5}{s^2}\right] = 0$$

$$s^2 - 5 = 0 \Rightarrow s = \pm\sqrt{5}$$

$$s = -\sqrt{5} it\ enters$$

37. For the synchronous sequential circuit shown below, the output Z is zero for the initial conditions $Q_A Q_B Q_C = Q_A' Q_B' Q_C' = 100$

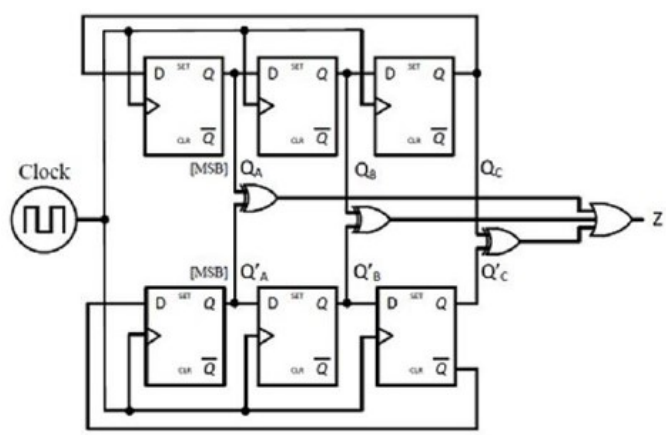

The minimum number of clock cycles after which the output Z would again become zero is _____

a) 7 b) 5 c) 6 d) 8

Key: c

Exp: Upper part of the circuit is ring counter and lower part of the circuit is Johnson counter as per the connection established. Outputs of the Ring counter and Johnson counter is given to Ex-OR. Gates, whose output is given to the three, inputs OR-gate.
Ring counter output

Ring	counter	output	Jonson	counter	output	
Q_A	Q_B	Q_C	Q'_A	Q'_B	Q'_C	Z
1	0	0	1	0	0	0 ← *inital volume*
0	1	0	1	1	0	1 1CP
0	0	1	1	1	1	1 2CP
1	0	0	0	1	1	1 3CP
0	1	0	0	0	1	1 4CP
0	0	1	0	0	0	1 5CP
1	0	0	1	0	0	0 6CP

So, output Z will become again 1 after 6 clock pulses.

38. In the circuit shown below, the value of capacitor C required for maximum power to be transferred to the load is

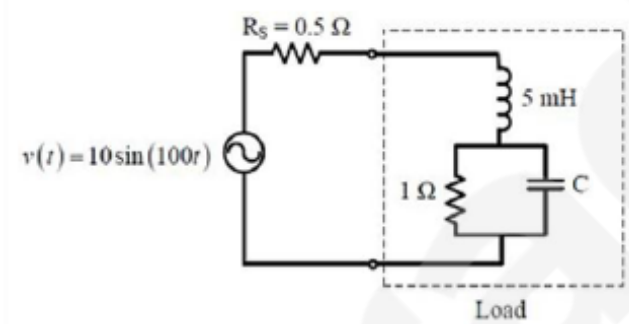

(A) 1 nF (B) 1 μF (C) 1 mF (D) 10 mF
Key: (D)
Exp: To get the maximum power the load Ckt must be at resonance i.e. imaginary part of load impedance is zero.

$$Z_L = j\omega L + \frac{R \times \frac{1}{j\omega C}}{R + \frac{1}{j\omega C}} = j\omega L + \frac{R}{1 + j\omega C}$$

$$= j\omega L + \frac{R(1 - j\omega C)}{1 + \omega^2 + R^2 + C^2}$$

$$jterm = 0$$

$$\Rightarrow \omega L = \frac{\omega R^2 C}{1 + \omega^2 + R^2 C^2} \Rightarrow L = \frac{R^2 C}{1 + \omega^2 R^2 C^2}$$

$$\Rightarrow 5 \times 10^{-3} = \frac{C}{1 + 10^4 C^2}$$

From options C 10mF will satisfy the about equation

39. In the circuit shown all elements are ideal and the switch S is operated at 10 kHz and 60% duty ratio. The capacitor is large enough so that the ripple across it is negligible and at steady state acquires a voltage as shown. The peak current in amperes drawn from the 50 V DC source is _____. (Give the answer up to one decimal place.)

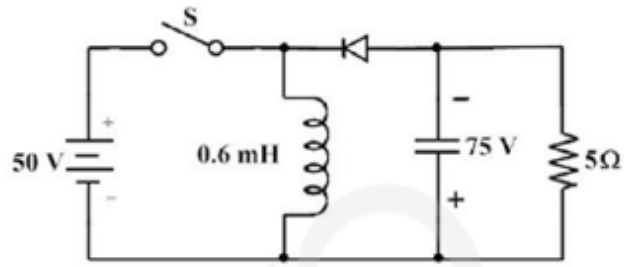

a) 40 b) 34
b) c) 54 d) 28
Key: a
Exp: Given is Buckboost converter

$$V_0 = \frac{DV_S}{1 - D}$$

$$Given V_S = 50V, D = 0.6, V_0 = 75V$$

$$\frac{V_0}{V_S} = \frac{I_0}{I_S} = \frac{D}{1 - D} = \frac{0.6}{1 - 0.6} = 1.5$$

$$I_0 = \frac{V_0}{R} = \frac{75}{5} = 15A$$

$$I_S = \frac{D}{1 - D}.I_0 = \frac{3}{2} \times 15 = 22.5A$$

Since capacitor is very large, $I_c = 0$

$$I_{Lavg} = I_{savg} + I_{oavg}$$

$$I_L = I_s + I_o = 22.5 + 15 = 37.5A$$

$$\Delta I_L = \frac{DV_S}{f_L} = \frac{0.6 \times 50}{10,000(0.6 \times 10^{-3})} = 5A$$

$$\therefore I_{Lpeak} = I_L + \frac{\Delta I_L}{2} = 37.5 + \frac{5}{2} = 40A$$

Peak current drawn from source is 40A

40. In the circuit shown in the figure, the diode used is ideal. The input power factor is _____. (Give the answer up to two decimal places.)

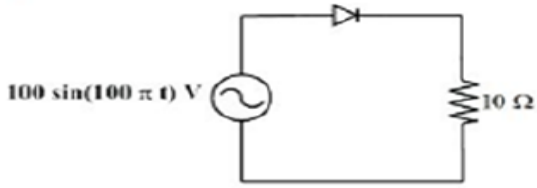

a) 1.083 b) 0.70 c) 2.12 d)
Key: b

Exp:

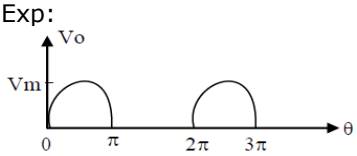

$$V_{or} = \frac{V_m}{2}$$

$$V_m = \sqrt{2}V_s$$

$$I_{or} = \frac{V_{or}}{R} = \frac{V_m}{2R}$$

$$\frac{V_m}{2} = \frac{\sqrt{2}}{2}V_S = \frac{V_S}{\sqrt{2}}$$

$$IPF = \frac{P_{Load}}{InputVA} = \frac{V_{or}I_{or}}{V_S I_{or}} = \frac{V_{or}}{V_S}$$

$$= \frac{V_S}{\sqrt{2}V_S} = \frac{1}{\sqrt{2}} = 0.707$$

41. Consider the system described by the following state space representation

$$\begin{bmatrix} \dot{x}_1(t) \\ \dot{x}_2(t) \end{bmatrix} = \begin{bmatrix} 0 & 1 \\ 0 & -2 \end{bmatrix}\begin{bmatrix} x_1(t) \\ x_2(t) \end{bmatrix} + \begin{bmatrix} 0 \\ 1 \end{bmatrix}u(t)$$

$$y(t) = \begin{bmatrix} 1 & 0 \end{bmatrix}\begin{bmatrix} x_1(t) \\ x_2(t) \end{bmatrix}$$

If u (t) is a unit step input and $\begin{bmatrix} x_1(t) \\ x_2(t) \end{bmatrix} = \begin{bmatrix} 0 \\ 1 \end{bmatrix}$, the value of output y(t) at t = 1 sec (rounded off to three decimal places) is_____

a) 1.283 b) 3.213 c) 4.290 d) 5.437

Key: 1.283

Exp: Given $A = \begin{bmatrix} 0 & 1 \\ 0 & -2 \end{bmatrix}$

$$B = \begin{bmatrix} 0 \\ 1 \end{bmatrix}$$

$$C = \begin{bmatrix} 1 & 0 \end{bmatrix}$$

$$X(s) = (SI - A)^{-1}[x(0) + Bu(s)]$$

$$= \frac{\begin{bmatrix} s+2 & 1 \\ 0 & s \end{bmatrix}}{s^2 + 2s}\left[\begin{bmatrix} 1 \\ 0 \end{bmatrix} + \begin{bmatrix} 0 \\ 1 \end{bmatrix}1/S\right] = \frac{\begin{bmatrix} (s+2) & 1 \\ 0 & s \end{bmatrix}}{s(s+2)}\begin{bmatrix} 1 \\ s \end{bmatrix}$$

$$X(s) = \frac{\begin{bmatrix} (s+2) + \frac{1}{s} \\ 1 \end{bmatrix}}{s(s+2)}; y(s) = \frac{s(s+2)+1}{s^2(s+2)}$$

$$y(s) = \frac{1}{s} + \frac{1}{s^2(s+2)} = \frac{1}{s} - \frac{1}{4s} + + \frac{1}{2s^2} + \frac{1}{4(s+2)}$$

$$y(1) = \frac{3}{4}4(t) + \frac{1}{2}t4(t) + \frac{1}{4}e^{-2t}4(t) = \frac{3}{4} + \frac{1}{2} + \frac{1}{4}e^{-2}$$

$$y(1) = 1.2838$$

42. A star-connected, 12.5 kW, 208 V (line), 3-phase, 60 Hz squirrel cage induction motor has following equivalent circuit parameters per phase referred to the stator: $R_1 = 0.3\Omega, R_2 = 0.3\Omega,, X_1 = 0.41\Omega, X_2 = 0.41\Omega$, Neglect shunt branch in the equivalent circuit. The starting current (in Ampere) for this motor when connected to an 80 V (line), 20 Hz, 3-phase AC source is _____.

a) 70.05 b) 45.23
c) 79 d) none of these

Key: a

Exp:

For star connected motor,

$$I_{st} = \frac{V_{ph}}{\sqrt{(R_1 + R_2')^2 + (X_1 + X_2')^2}}$$

At 20 Hz frequency, the reactance changes

$X \propto f$

$$x' = \frac{f'}{f}x = \frac{20}{60}x = \frac{x}{3}$$

$$x_1' = x_2' = \frac{0.41}{3}$$

$$I_{st} = \frac{\frac{80}{\sqrt{3}}}{\sqrt{0.6^2 + \left(\frac{0.82}{3}\right)^2}} = 70.0533 \text{ A}$$

43. A 25 kVA, 400 V, Δ- connected, 3-phase, cylindrical rotor synchronous generator requires a field current of 5 A to maintain the rated armature current under short-circuit condition. For the same field current, the open-circuit voltage is 360 V. Neglecting the armature resistance and magnetic saturation, its voltage regulation (in % with respect to terminal voltage), when the generator delivers the rated load at 0.8 pf leading, at rated terminal voltage is _____.

A) -14.6% B) -12%
C) -15% D) -34%

Key: a

Exp:

$$25kVA, I_L = \frac{25\times10^3}{\sqrt{3}\times400} = 36.084\,Amps$$

$$400V, \Delta - connection$$

$$V_{oc} = 360V, I_{ph} = 20.833\,Amps$$

$$I_{SC} = I_{related}, I_f = 5A$$

$$X_s = Z_s = \frac{V_{oc}/phase}{I_{SC}/phase} = \frac{360}{20.833} = 17.28\Omega$$

$$E = \sqrt{(V\cos\phi + I_aR_a)^2 + (V\sin\phi - I_aR_a)^2}$$

$$\sqrt{(400\times0.8+0)^2 + (400\times0.6 - 20.833\times17.28)^2}$$

$$E_{ph} = 341.758\,volts$$

$$\%\,\mathrm{Re}\,g = \frac{341.758-400}{400} = -14.6\%$$

Hint: Obtained regulation should be negative.

44. If the primary line voltage rating is 3.3 kV (Y side) of a 25 kVA. Y-Δ transformer (the per phase turns ratio is 5:1), then the line current rating of the secondary side (in Ampere) is_____.

a) 37.879 b) 42.159

c) 54.320 d) 78

Key: a

Exp:

$$25KVA, Y-D, 3.3kV-\Delta$$

$$N_1 : N_2 = 5:1$$

$$I_{st} = \frac{25\times10^3}{\sqrt{3}\times3.3\times10^3}$$

$$I_L = I_{ph} = 4.374\,Amps$$

Transformer is a constant-Power device

$$E_2I_2 = E_1I_1$$

$$N_2I_2 = N_1I_1 \Rightarrow I_2 = \frac{N_1}{N_2}.I_1 = \frac{5}{1}\times4.374$$

$$I_{ph} = I_2 = 21.869\,Amps \leftarrow \Delta - side$$

$$I_L = \sqrt{3}\times I_2 = \sqrt{3}\times21.869 = 37.879\,Amps$$

45. For the balanced Y-Y connected 3-Phase circuit shown in the figure below, the line-line voltage is 208 V rms and the total power absorbed by the load is 432 W at a power factor of 0.6 leading.

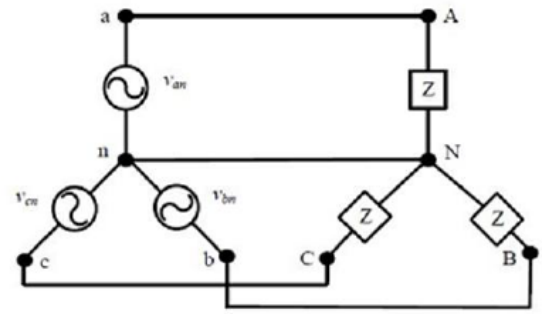

The approximate value of the impedance Z is

(A) $33\angle-53.1^o\Omega$ (B) $60\angle53.1^o\Omega$

(C) $60\angle-53.1^o\Omega$ (D) $180\angle-53.1^o\Omega$

Key: (C)

Exp:

$$V_L = 208V, P = 432W$$

$$\cos\phi = 0.6\,leading$$

$$P = 3V_{ph} - I_{ph} - \cos\phi$$

$$P = 3.\frac{V_{ph}^2}{Z_{ph}}.\cos\phi Z_{ph}$$

$$= \frac{3\times\left(\frac{208}{\sqrt{3}}\right)^2\times0.6}{432} = 60.08\Omega$$

$$\cos^{-1}0.6 = 53.1^o$$

$$Z_{ph} = 60\left|\underline{-53.1^o}\right.$$

$$Z_{ph} = \frac{V_{ph}}{I_{ph}\left|\underline{-53.1^o}\right.} = \frac{V_{ph}}{I_{ph}}\left|\underline{-53.1^o}\right.$$

46. A thin soap bubble of radius R = 1 cm, and thickness a = 3.3μm (a<<R)is at a potential of 1 V with respect to a reference point at infinity. The bubble bursts and becomes a single spherical drop of soap (assuming all the soap is contained in the drop) of radius r. The volume of the soap in the thin bubble is $4\pi R^2a$ and that of the drop is $\frac{4}{3}\pi r^3$. The potential in volts, of the resulting single spherical drop with respect to the same reference point at infinity is _____. (Give the answer up to two decimal places.)

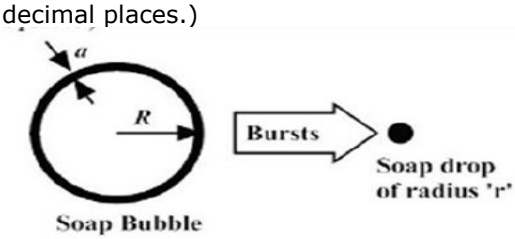

a) 10.03 b) 8.75 c) 12.24

d) 17

Key: a

Exp: Charge must be same

$$(4\pi R^2 a)P_v = \left(\frac{4}{3}\pi r^3\right)P_v$$

$$r = \sqrt[3]{3R^2 a}$$

$$0.996\times10^{-3}$$

The potential of thin bubble is 1 V

$$1 = \frac{Q}{4\pi E_o \times 1\times10^{-2}}$$

$$Q = 4\pi\varepsilon_o \times 1\times10^{-2} C$$

Potential of Soap drop

$$V = \frac{Q}{4\pi\varepsilon_o r}$$

$$= \frac{4\pi\varepsilon_o \times 10^{-2}}{4\pi\varepsilon_o \times 0.9966\times10^{-3}}$$

$$= 10.03V$$

47. The value of the contour integral in the complex-plane

$$\oint \frac{z^3 - 2z + 3}{z-2} dz$$

Along the contour |Z| = 3, taken counter-clockwise is

(A) $-18\pi i$ (B) 0 (C) $14\pi i$ (D) $48\pi i$

Key: (C)

Exp: z = 2 is the singularity lies inside $C:|z| = 3$

$\therefore \oint \frac{z^3 - 2z + 3}{z-2} dz = 2\pi i(z^3 - 2z + 3)_{z=2} = 14\pi i$ (Using Cauchy's Integral formula)

48. Let $g(x) = \begin{cases} -x & x \le 1 \\ x+1 & x \ge 1 \end{cases}$ $and f(x) = \begin{cases} 1-x & x \le 1 \\ x^2 & x > 1 \end{cases}$

Consider the composition of f and g, i.e., (fog)(x)=f(g(x)) The number of discontinuities in (fog)(x) present in the interval $(-\infty, 0)$ is:

(A) 0 (B) 1 (C) 2 (D) 4

Key: (A)

Exp: Clearly $(fog)(x) = \begin{cases} 1-x & x \le 1 \\ x^2 & x \ge 1 \end{cases}$ is discontinuous at

$x = 1 \notin (-\infty, 0)$

$\therefore$ The number of discontinuities in (fog) (x) present in the interval $(-\infty, 0)$ is 0

Alternative Method:

$f(x) = 1 - x$ For x < 0 and $g(x) = -x$ for $x < 0$

$\therefore$ Both f(x) and g(x) are continuous when x < 0

$\Rightarrow (fog)(x)$ is also continuous for x < 0

(Since the composite function of two continuous functions is continuous)

$\therefore$ The number of discontinuities in the interval $(-\infty, 0)$ i.e., x < 0 is '0'

49. A 120 V DC shunt motor takes 2 A at no load. It takes 7 A on full load while running at 1200 rpm. The armature resistance is 0.8Ω, and the shunt field resistance is 240 Ω. The no load speed, in rpm, is _____.

a) 1242 b) 1442

c) 1324 d) 1278

Key: a

Exp:

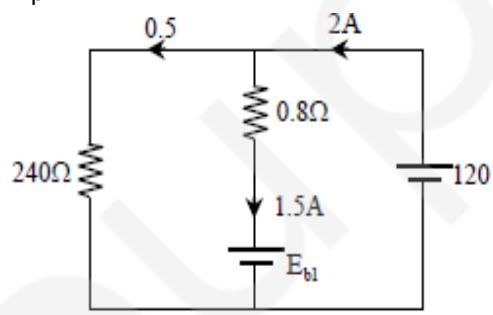

No load, $N_1 = ?$

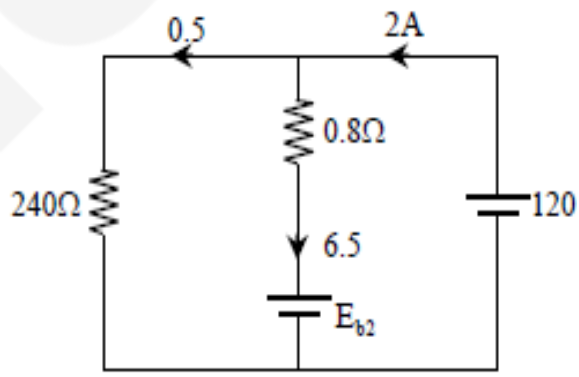

Full load, $N_2 = 1200$rpm

$$N \propto E_b$$

$$\frac{N_1}{N_2} = \frac{E_{b_1}}{E_{b_2}} \Rightarrow N_1 = \left[\frac{120 - (1.5\times0.8)}{120 - (6.5\times0.8)}\right]\times1200$$

$$= 1241.82 rpm$$

50. A 10 ½ digit timer counter possesses a base clock of frequency 100 MHz. When measuring a particular input, the reading obtained is the same in: (i) Frequency mode of operation with a gating time of one second and (ii) Period mode of operation (in the x 10 ns scale). The frequency of the unknown input (reading obtained) in Hz is _____.

a) 10^7 b) 10^8

c) 10^6 d) 1

Key: b

1 $10\frac{1}{2}$ digital timer counter:

Frequency mode of operation: $f = \frac{n}{t}$

Let $f \Rightarrow$ freqeuncy of input signal

Let $n \Rightarrow$ number of cycles of repetitive signal $\Rightarrow 100 \times 10^6$

Let $t \Rightarrow$ Gate time $\Rightarrow t = 1$ sec

$$f = \frac{100 \times 10^6}{1\,\text{sec}} = 10^8 \text{ Hz} = 10^8 \text{cycles/sec.}$$

On $10\frac{1}{2}$ digit display $\Rightarrow$ 1 0 0 0 0 0 0 0 0 • 0 0 Hz

2. Period mode of operation:

$$P = \frac{1}{f} = \frac{t}{n} = \frac{1\,\text{sec}}{100 \times 10^6}$$

Let, $P \Rightarrow$ Period of input signal

$$P = 0.01 \times 10^{-6} = 1 \times 10^{-8}$$
$$= 10 \times 10^{-9} = 1 \times 10 \times 10^{-9} = 1 \times 10 \text{ n-sec}$$
$$= 1\,0 \bullet 0\,0\,0\,0\,0\,0\,0\,0\,0 \text{ n-sec}$$

51. A person decides to toss a fair coin repeatedly until he gets a head. He will make at most 3 tosses. Let the random variable Y denote the number of heads. The value of var {Y}, where var {.} denotes the variance, equals

(A) $\frac{7}{8}$ (B) $\frac{49}{64}$

(C) $\frac{7}{64}$ (D) $\frac{105}{64}$

Key: (C)

Let y = number of head

Y	0	1
P(Y)	$\frac{1}{8}$	$\frac{7}{8}$

$$E(Y) = \frac{7}{8}$$

$$E(Y^2) = \frac{7}{8}$$

$$V(Y) = E(Y^2) - (E(Y))^2$$

$$= \frac{7}{8} - \left(\frac{7}{8}\right)^2$$

$$= \frac{7}{8} - \frac{49}{64}$$

$$= \frac{7}{64}$$

52. The figure below shows a half-bridge voltage source inverter supplying an RL-load with $R = 40\Omega$ and $L = \left(\frac{0.3}{\pi}\right)H$. The desired fundamental frequency of the load voltage is 50 Hz. The switch control signals of the converter are generated using sinusoidal pulse width modulation with modulation index. M = 0.6. At 50 Hz, the RL-load draws an active power of 1.44 kW. The value of DC source voltage V_{DC} in volts is

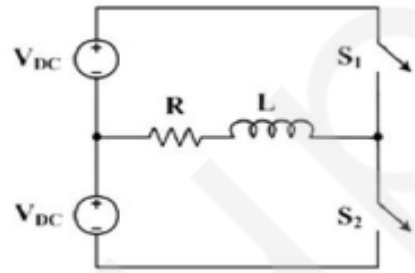

(A) $300\sqrt{2}$ (B) 500

(C) $500\sqrt{2}$ (D) $1000\sqrt{2}$

Key: (C)

Exp:

$$x_L = \omega L = 100\pi \times \frac{0.3}{\pi} = 30\Omega$$

$$z = R_L + jx_L = 40 + j30 = 50\angle 36.86$$

$$M = 0.6$$

$$I_{load} = \sqrt{\frac{P_L}{R_L}} = \sqrt{\frac{1440}{40}} = 6A$$

$$I_{load} = \frac{VA_{o1}}{z_1} \Rightarrow 6 = \frac{VA_{o1}}{50}$$

$$VA_{o1} = 300V(rms)$$

$$VA_{o1} = 300\sqrt{2}V(rms)$$

$$VA_{o1} = mV_{dc}$$

$$300\sqrt{2} = 0.6 \times V_{dc}$$

$$\therefore V_{dc} = 500\sqrt{2}$$

53. The range of K for which all the roots of the equation $S^3 + 3S^2 + 2S + K = 0$ are in the left half of the complex s-plane is

(A) 0 < K < 6 (B) 0 < K < 16 (C) 6< K < 36 (D) 6< K < 16

Key: (A)

Exp: 3 2 C.E= $S^3 + 3S^2 + 2S + K = 0$

If system to be stable

$$K > 0 \cap 6 > K$$

$$0 < K < 6$$

54. The eigen values of the matrix given below are

$$\begin{bmatrix} 0 & 1 & 0 \\ 0 & 0 & 1 \\ 0 & -3 & -4 \end{bmatrix}$$

(A) (0, -1, -3) (B) (0,-2,-3)
(C) (0, 2, 3) (D) (0,1,3)
Key: (A)
Exp: Characteristic equation is

$$\begin{vmatrix} -\lambda & 1 & 0 \\ 0 & -\lambda & 1 \\ 0 & -3 & -4-\lambda \end{vmatrix} = 0$$

$$\Rightarrow -\lambda(4\lambda+\lambda^2+3)=0 \Rightarrow \lambda(\lambda+1)(\lambda+3)=0$$

$$\Rightarrow \lambda = 0,-1,-3 \textit{are the Eigen values}$$

55. A 3-phase 50 Hz generator supplies power of 3MW at 17.32 kV to a balanced 3-phase inductive load through an overhead line. The per phase line resistance and reactance are
0.25Ω and 3.925Ω respectively. If the voltage at the generator terminal is 17.87 kV, the power factor of the load is _____.
a) 0.75 b) 1.435
c) 2 d) 3.12
Key: a
Exp:

$$P_s = 3MW$$

$$Z = 3.9329\underline{|86.35}\,\Omega / ph$$

$$E_f = 17.32KV$$

$$V_t = \frac{17.87}{\sqrt{3}} = 10317.249V / ph$$

$$V_t = 17.87KV$$

$$E_f = 10.000V / ph$$

$$\alpha_2 = 90 - 86.35 = 3.65$$

$$P_{og} = \frac{E_f V_f}{Z_s}\sin(\delta+\alpha_2) - \left(\frac{V_t}{Z_s}\right)^2 \times 0.25$$

$$\delta = 2.3024$$

$$(I_a Z_s)^2 = E_f^{\,2} + V_t^2 - 2E_f V\cos\delta$$

$$I_a = 131.43A / ph$$

$$P_s = 3MW = \sqrt{3}\times 17.87\times 10^3 \times 131.42 \times \cos\phi$$

$$\cos\phi = 0.737$$

General Aptitude
Q. No. 1 – 5 Carry One Mark Each

1. There are five buildings called V, W, X, Y and Z in a row (not necessarily in that order). V is to the West of W, Z is to the East of X and the West of V, W is to the West of Y. Which is the building in the middle?
(A) V (B) W (C) X (D) Y
Key: (A)
Exp: From the given data, the following is formed

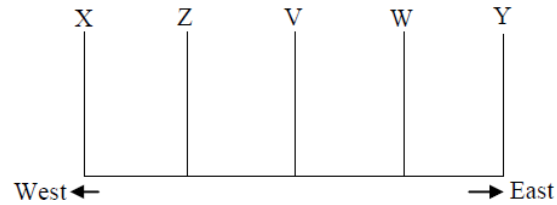

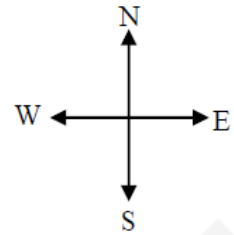

∴ The building 'V' is in the middle

2. Saturn is _____ to be seen on a clear night with the naked eye.
(A) enough bright
(B) bright enough
(C) as enough bright
(D) bright as enough
Key: (B)
The word 'enough' as an adverb falls after the adjective so 'bright enough' is the right answer.

3. Choose the option with words that are not synonyms.
(A) aversion, dislike
(B) luminous, radiant
(C) plunder, loot
(D) yielding, resistant
Key: (D)
'Yielding' means tending to do whereas 'resistant' means opposed to something, so both are not synonyms.

4. There are 3 red socks, 4 green socks and 3 blue socks. You choose 2 socks. The probability that they are of the same color is
(A) 1/5 (B) 7/30 (C) 1/4 (D) 4/15
Key: (D)
Exp:

$$\frac{{}^3C_2 + {}^4C_2 + {}^3C_2}{{}^{10}C_2} = \frac{12}{45} = \frac{4}{15}$$

5. A test has twenty questions worth 100 marks in total. There are two types of questions. Multiple choice questions are worth 3 marks each and essay questions are worth 11 marks each. How many multiple-choice questions does the exam have?
(A) 12 (B) 15 (C) 18 (D) 19
Key: (B)
Exp:
x+y=20 x=MCQ
3x+11y=100 y= essay type
$\Rightarrow$ x=15, y=5

Q. No. 6 – 10 Carry Two Marks Each

6. An air pressure contour line joins locations in a region having the same atmospheric pressure. The following is an air pressure contour plot of a geographical region. Contour lines are shown at 0.05 bar intervals in this plot.

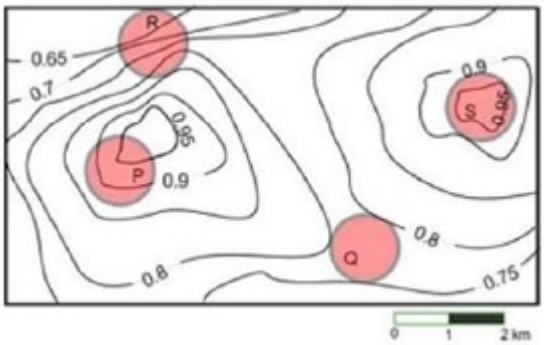

If the possibility of a thunderstorm is given by how fast air pressure rises or drops over a region, which of the following regions is most likely to have a thunderstorm?
(A) P (B) Q (C) R (D) S
Key: (C)
Exp:

Region	Air pressure difference
P	0.95 – 0.90 = 0.05
Q	0.80 – 0.75 = 0.05
R	0.85 – 0.65 = 0.20
S	0.95 – 0.90 = 0.05

In general thunder storms are occurred in a region where suddenly air pressure changes (i.e.,) should rise (or) sudden fall of air pressure. From the given contour map in „R" region only more changes in air pressure. So, the possibility of a thunder storms in this region.
So option (C) is correct.

7. There are three boxes. One contains apples, another contains oranges and the last one contains both apples and oranges. All three are known to be incorrectly labelled. If you are permitted to open just one box and then pull out and inspect only one fruit, which box would you open to determine the contents of all three boxes?
(A) The box labelled 'Apples'
(B) The box labelled „Apples and 'Oranges'
(C) The box labelled 'Oranges'
(D) Cannot be determined
Key: (B)
Exp: The person who is opening the boxes, he knew that all 3 are marked wrong.

Suppose if 3 boxes are labelled as below.

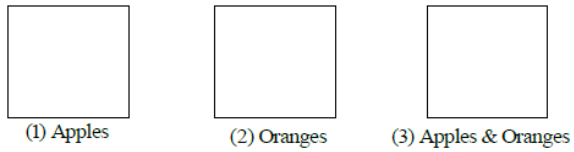

If he inspected from Box(1), picked one fruit, found orange, then he don't know whether box contains oranges (or) both apples and oranges.
Similarly, if he picked one fruit from box (2), found apple then he doesn't know whether box contain apples (or) both apples and oranges.
But if he picked one fruit from box (3), i.e., labelled is "apples and oranges", if he found apple then he can decide compulsorily that box(3) contains apples and as he knew all boxes are labelled as incorrect, he can tell box(2) contains both apples and oranges, box(1) contain remaining oranges. So, he should open box labelled „Apples and Oranges" to determine contents of all the three boxes.

8. "We lived in a culture that denied any merit to literary works, considering them important only when they were handmaidens to something seemingly more urgent – namely ideology. This was a country where all gestures, even the most private, were interpreted in political terms."
The author's belief that ideology is not as important as literature is revealed by the word:
(A) 'culture'(B) 'seemingly'
(C) 'urgent' (D) 'political'
Key: (B)
It appears to be 'B', so the right option is 'B'.

9. X is a 30-digit number starting with the digit 4 followed by the digit 7. Then the number 3 X will have
(A) 90 digits (B) 91 digits (C) 92 digits (D) 93 digits
Key: (A)
Exp: X =(47.....)30digits
Suppose $(47)^3$ =2+2+2 digits in $(47)^3$
Similarly $(47)^3$ =contains 30+30+30 digits = 90

10. The number of roots of $e^x + 0.5x^2 - 2 = 0$ in the range [-5,5] is
(A) 0 (B) 1 (C) 2 (D) 3
Key: (C)
Exp: f(x) = $e^x + 0.5x^2 - 2 = 0$
f(-5)=10.50;f(-4)=6.01,f(-2)=0.135;f(-1)=-1.13;
f(0)=-1.50;f(1)=1.21,f(2)=7.38;f(3),f(4,f(5) also +ve.
∴ As there are 2 sign changes from +ve to –ve and –ve to +ve, two roots will be there in the range [-5, 5].

***